COMPRESSORS: A General Design Guideline

Florida Board of Professional Engineers
Approved Course No. 0010329

4 PDH Hour

Course Description:

This course is intended to familiarize Florida Professional Engineers with all types of COMPRESSORS (Reciprocating, Centrifugal, Rotary Screw, Axial, and Liquid Rings Type) and can be used to assist in the development of a basic engineering design package.

How to reach Us …

If you have any questions regarding this course or any of the content contained herein you are encouraged to contact us at Easy-PDH.com. Our normal business hours are Monday through Friday, 10:00 AM to 4:00 PM; any inquiries will be answered within 2 days or less. Contact us by:

EMAIL: bajohnstonpe@aol.com
Phone: 888-418-2844 (toll free)
FAX: 813-909-8643

Refer to Course No. 0010329, COMPRESSORS: A General Design Guideline

Here's How the Course Works…

What do you want To do?	LOOK For This!
Search for Test Questions and the relevant review section	Q1 Search the PDF for: Q1 for Question 1, Q2 for Question 2, Q3 for Question 3, Etc… (Look for the icon on the left to keep you ON Target!)

A test is provided to assess your comprehension of the course material – 24 questions have been chosen from the course material. You will need to answer at least 17 out of 24 questions correctly (>70%) in order to pass the overall course. You can review the course material and re-take the test if needed.

Easy-PDH.com (FBPE Approved Provider 442)
Britian Arthur Johnston PE (50603)
Johnston Service Corp
CA No. 30074
11909 Riverhills Drive, Tampa FL 33617
Email: bajohnstonpe@aol.com
Toll Free: 888-418-2844 FAX: 813-909-8643

24 TEST QUESTIONS

Q1: [See Section 2.0 INTRODUCTION]

Compressors are typically used in which applications in a process plant:

(A) Utility Air
(B) To increase Gas pressure for use in a number of unit operations
(C) Instrument Air
(D) All of the Above

Q2: [See Section 4.1 Reciprocating Compressors]

What component of a Reciprocating Compressor is employed to increase the exiting Gas Pressure :

(A) a rotating vane type impeller
(B) a rotating wheel type impeller
(C) back and forth motion of a piston
(D) A or B

Q3: [See Section 4.1.2 Noise and Vibration and Their Control]

Noise is always a consideration in the design and operation of a reciprocating compressor. A solution to mitigate noise is to "close-couple" a silencer on the discharge end of the compressor. Close-coupling typically implies the no more than:

(A) 1 pipe diameter from the compressor discharge to the silencer
(B) 1 pipe diameter from the compressor inlet to the silencer
(C) 3 pipe diameters from the compressor discharge to the silencer
(D) 3 pipe diameters from the compressor inlet to the silencer

Q4: [See Section 4.2 Centrifugal Compressors]

Installation of what piece of equipment improves the efficiency of a multi-stage centrifugal compressor:

(A) An intercooler between stages
(B) A control valve between stages
(C) An inlet silencer between stages
(D) A discharge silencer between stages

Q5: [See Section 4.2.1 Operating Curves (Centrifugal Compressors)]

Which answer best describes the condition of SURGE in the operation of a centrifugal compressor:

(A) outlet flow from the compressor is high enough to cause a momentary reversal of flow
(B) inlet flow to the compressor is high enough to cause a momentary reversal of flow
(C) inlet flow to the compressor is low enough to cause a momentary reversal of flow
(D) inlet flow to the compressor is low enough to cause a momentary forward surge of flow

Q6: [See Section 4.2.2 Vibration and Vibration Control (Centrifugal Compressors)]

Noise produced by a centrifugal compressor can be related it's Blade Passing Frequency. Calculate the Blade Passing Frequency for a centrifugal compressor that has 100 rotating blades and operates at 600 rpm:

(A) 60,000 hz
(B) 600 hz
(C) 10,000 hz
(D) 1000 hz

Q7: [See Section 4.2.3 Parallel Operation (Centrifugal Compressors)]

In order to operate two (2) Centrifugal Compressors in Parallel it is generally advisable to:

(A) maintain identical characteristic head / capacity curves of both compressors
(B) maintain equal pipe resistance of the inlet piping systems
(C) install minimum flow controllers on both compressors
(D) All of the Above

Q8: [See Section 4.3 Rotary Screw Compressors]

Rotary Screw Compressors are positive displacement devices that can be modulated to have a capacity range of:

(A) 10% to 100%
(B) 25% to 100%
(C) 33% to 100%
(D) 50% to 100%

Q9: [See Section 4.3.3 Parallel Operation (Rotary Screw Compressors)]

While Rotary Screw Compressors have a wide capacity range, performance significantly deteriorates at what percentage of full load:

(A) 60%
(B) 50%
(C) 40%
(D) 30%

Q10: [See Section 4.4 Axial Flow Compressors]

Axial flow compressors are similar to Centrifugal Compressors and are best described as:

(A) low and moderate pressure, large capacity machines
(B) low and moderate pressure, small capacity machines
(C) high pressure, large capacity machines
(D) high pressure, small capacity machines

Q11: [See Section 4.5 Liquid-Ring Compressors]

Why are Liquid-ring compressors sealed with water used in systems to supply breathing air and medical compressed air:

(A) seal water in the liquid-ring compressor is vaporized to form steam
(B) seal water in the liquid-ring compressor heats up the exiting air stream
(C) compressor lubricant is not required which could contaminate the exiting air stream
(D) seal water is immiscible in air

Q12: [See Section 4.5 Liquid-Ring Compressors]

Disadvantage(s) of using Liquid-Ring compressors include:

(A) high power consumption
(B) large amounts of cooling water are required for operation
(C) machined parts of the compressor must be machined of corrosion resistant materials
(D) all of the above

Q13: [See Section 5.1 Reciprocating Compressors]

What is the typical discharge temperature limitation for Reciprocating Compressors due to possible ignition of lube oil used in the compressor:

(A) 110 Degree Celcius
(B) 150 Degree Celcius
(C) 150 Degree Farenheit
(D) 150 Degree Kelvin

Q14: [See Section 5.1.2 Arrangement (Reciprocating Compressors)]

A cylinder non-lubricated Reciprocating Compressor is the best selection for which type of gas application:

(A) oxygen
(B) chlorine
(C) utility air
(D) A and B

Q15: [See Section 5.2.1 Arrangement (Centrifugal Compressors)]

In an Integrally geared centrifugal compressor what part transfers the motor rotation to one to four high speed pinions:

(A) bull gear
(B) bull pinion
(C) bull coupling
(D) pinion gear reducer

Q16: [See Section 5.2.3 Capacity and Anti-surge Control (Centrifugal Compressors)]

All of the following are suitable capacity control methods for Centrifugal Compressors EXCEPT:

(A) variable inlet guide vanes
(B) variable outlet guide vanes
(C) discharge throttling
(D) variable speed control

Q17: [See Section 5.3.1 Arrangement (Rotary Screw Compressors)]

In a dry-type rotary screw compressor the intermeshing rotors are not allowed to touch and are kept separated by:

(A) lubricated timing gears external to the compression chamber
(B) injection of a dry gas into the compression chamber
(C) an interstage cooler
(D) all of the above

Q18: [See Section 5.3.2 Compression Ratio vs. Volume Ratio (Rotary Screw Compressors)]

A Rotary Screw Compressor has an inlet volume of 200 CC and a discharge volume of 100 CC. Find the Volume Ratio of this machine:

(A) 0.5
(B) 2.0
(C) 1.0
(D) NA, Discharge pressure must be known to calculate the Volume Ratio

Q19: [See Section 5.3.3 Capacity Control (Rotary Screw Compressor)]

Of the following capacity control methods that could be employed on a Rotary Screw Compressor, which is LEAST efficient:

(A) rotating speed
(B) internal bypass
(C) unit bypass
(D) suction throttling

Q20: [See Section 5.4 Axial Flow Compressors]

In the construction of an axial flow compressor, which row of blades is called the Inlet Guide Vanes:

(A) first
(B) second
(C) first – 1
(D) last

Q21: [See Section 5.4 Axial Flow Compressors]

Which component section of an Axial Flow compressor is installed to decelerate the exit gas flow and convert the residual velocity energy into static pressure rise:

(A) inlet duct
(B) inlet guide vanes
(C) exit guide vanes
(D) discharge diffuser

Q22: [See Section 5.5 Liquid Ring Compressors]

On a liquid ring compressor, how is the temperature of the service liquid maintained below its vapor pressure:

(A) discharge gas is recirculated to the entry of the compressor
(B) a steady stream of cool service liquid is continuously added
(C) a steady stream of the hot service liquid is continuously removed
(D) discharge gas is vented off from the discharge of the compressor

Q23: [See Section 6.0 COMPRESSOR COOLING]

On a typical compressor, what device is installed in order to discharge condensed vapors from the gas stream:

(A) precooler
(B) intercooler
(C) aftercooler
(D) separator

Q24: [See Section 7.0 DRIVERS]

Which of the following IEC Drivers is typically the quietest (lowest dBA):

(A) Open Drip Proof (ODP) or (IP23)
(B) Weather Protected Type II or (IPW24)
(C) Totally Enclosed Water-to-Air Cooled or (IP54)
(D) Totally Enclosed Air-to-Air Cooled or (IP54)

END OF TEST QUESTIONS

COMPRESSORS
TABLE OF CONTENTS

1.0 SCOPE

This document provides guidance in the understanding of reciprocating, centrifugal, rotary screw and axial flow types of compressors. Particular emphasis has been placed on interpreting and understanding typical compressor curves, vibration monitoring and parallel operation of two or more compressors. Also included is a discussion concerning the utilization of coolers in compressor systems.

Q1

2.0 INTRODUCTION

Compressors are used in many applications in a processing plant. Every plant is sure to have instrument and utility air compressors, but compressors are also used for increasing the pressure of air and other gasses as required for any number of unit operations in a plant. Compressors are also used for transporting gasses in pipelines and for pressurizing air and gas for gas turbine operations. The different types of compressors and their applications are discussed in the sections that follow. It is important that the process data available be considered in the selection of the right compressor for the particular application. The type of compressor best suited for the service application will be achieved based on input from the process data, relevant industry codes and standards, careful attention to the preparation of compressor data sheets and serious discussions with the compressor manufacturers.

3.0 DESIGN STANDARDS AND OTHER REFERENCES

3.1 Industry Standards and Codes

3.1.1 American Petroleum Institute Standards (API)

American Petroleum Institute (API) Std 617 Axial and Centrifugal Compressors and Expander - Compressors for Petroleum, Chemical and Gas Industry Services

American Petroleum Institute (API) Std 618 Reciprocating Compressors for Petroleum, Chemical and Gas Industry Services

American Petroleum Institute (API) Std 619 Rotary-Type Positive Displacement Compressors for Petroleum, Chemical and Gas Services

American Petroleum Institute (API) Std 670 Machinery Protection Systems

American Petroleum Institute (API) Std 672 Packaged, Integrally Geared Centrifugal Air Compressors for Petroleum, Chemical and Gas Services

American Petroleum Institute (API) Std 681 Liquid Ring Vacuum Pumps and Compressors for Petroleum, Chemical and Gas Industry Services

3.2 Other References

Ingersoll-Rand Company, Compressed Air and Gas Data, Second Edition, 1971

Brown, Royce N., Compressors: Selection and Sizing, 2nd Edition, 1986, Gulf Publishing Company, ISBN: 0-87201-135-6.

Stahley, John, Dry Gas Seal System Design Standards for Centrifugal Compressor Applications – Dresser Rand, Turbo Products, Orlean, NY, USA.

4.0 PRINCIPLES OF OPERATION

4.1 Reciprocating Compressors

Q2

Reciprocating compressors find application in a broad spectrum of industries. Small portable compressors to very large (>8 MW) process machines are found in chemical, petrochemical and refinery facilities.

In spite of the interest in the simplicity of centrifugal compressors, which are being used in many applications that had been the domain of reciprocating compressors, reciprocating compressors still are found in many services. It is fairly common to install a centrifugal compressor in series with a reciprocating compressor, with the centrifugal machine handling a high volume, low pressure gas and the reciprocating compressor being used to deliver the high end pressure. Delivery pressures of 3000 bars and higher can be achieved in this fashion.

Reciprocating compressors employ pistons to compress the gas. A schematic diagram of a reciprocating compressor is shown in Figure 1.

Figure 1
Diagrammatic Illustration of Reciprocating Compressor

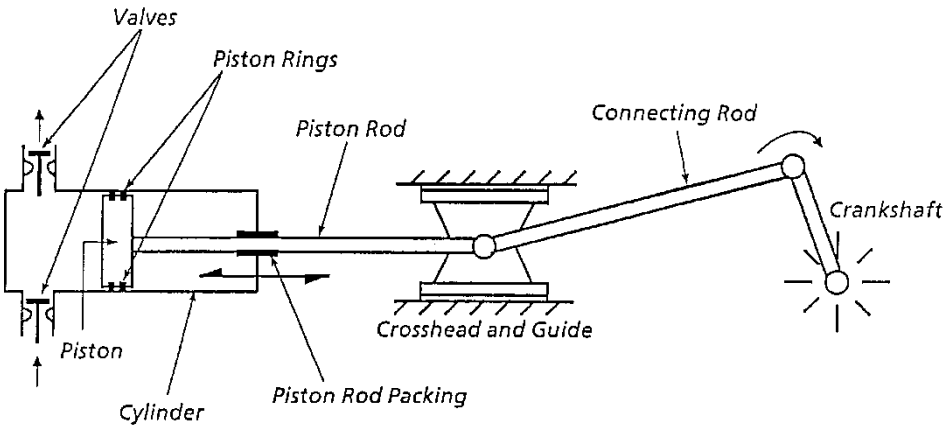

A rotary motion of the driving crankshaft by way of a connecting rod and a sliding crosshead provides the impetus for the reciprocating motion of the piston. Gas enters and leaves the cylinder through the compressor valves,

which work as self-acting dynamic non-return valves. Valves of different types are used, of which plate valves are the most common. Each valve opens and closes once for each revolution of the crankshaft. To put this in perspective, if a compressor is operating at 400 rpm for 12 hours per day and 300 days per year, the valve will open and close 24,000 times per hour, 288,000 times per day and 86,400,000 times per year. Several types of valves are shown in figures 2 through 4. Note: Since valve replacement is a continuing maintenance issue, to avoid replacing valves in the wrong position, the suction and discharge valves should not be interchangeable.

Figure 2
Inlet and Discharge Disassemblies of an Annular Ring Valve

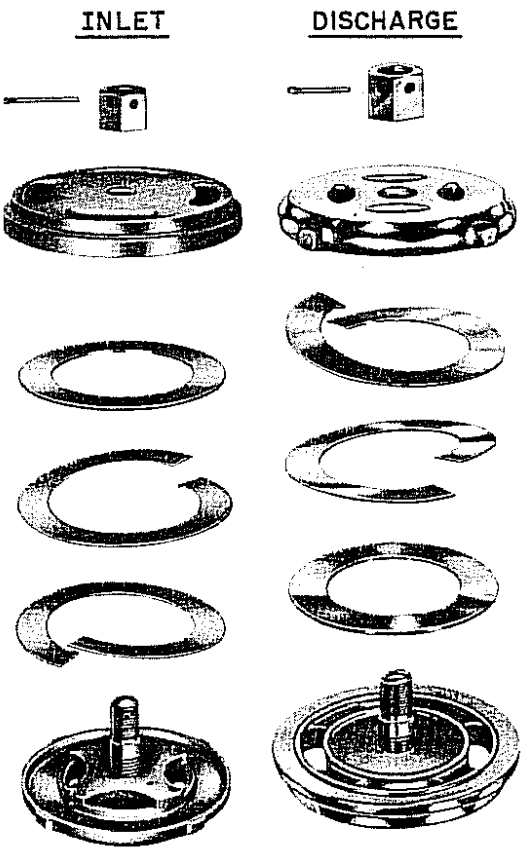

Ingersoll-Rand

Figure 3
Typical Leaf Valve Showing Method of Operation

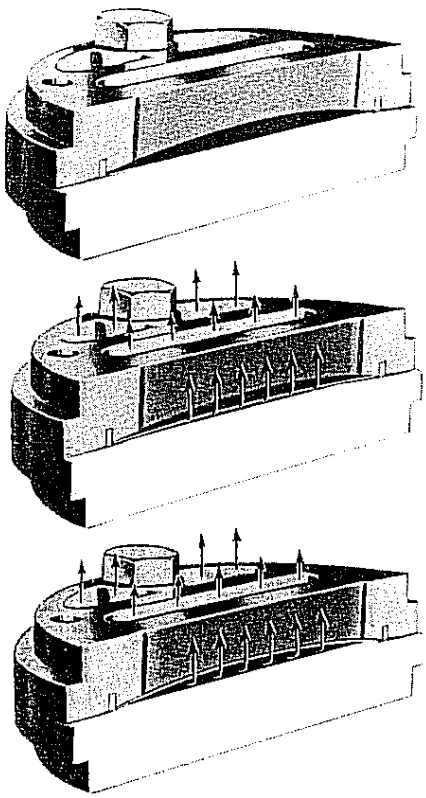

Worthington Corporation

Figure 4
Typical Cushioned Channel Valve Before Assembly and Sections Showing Operation

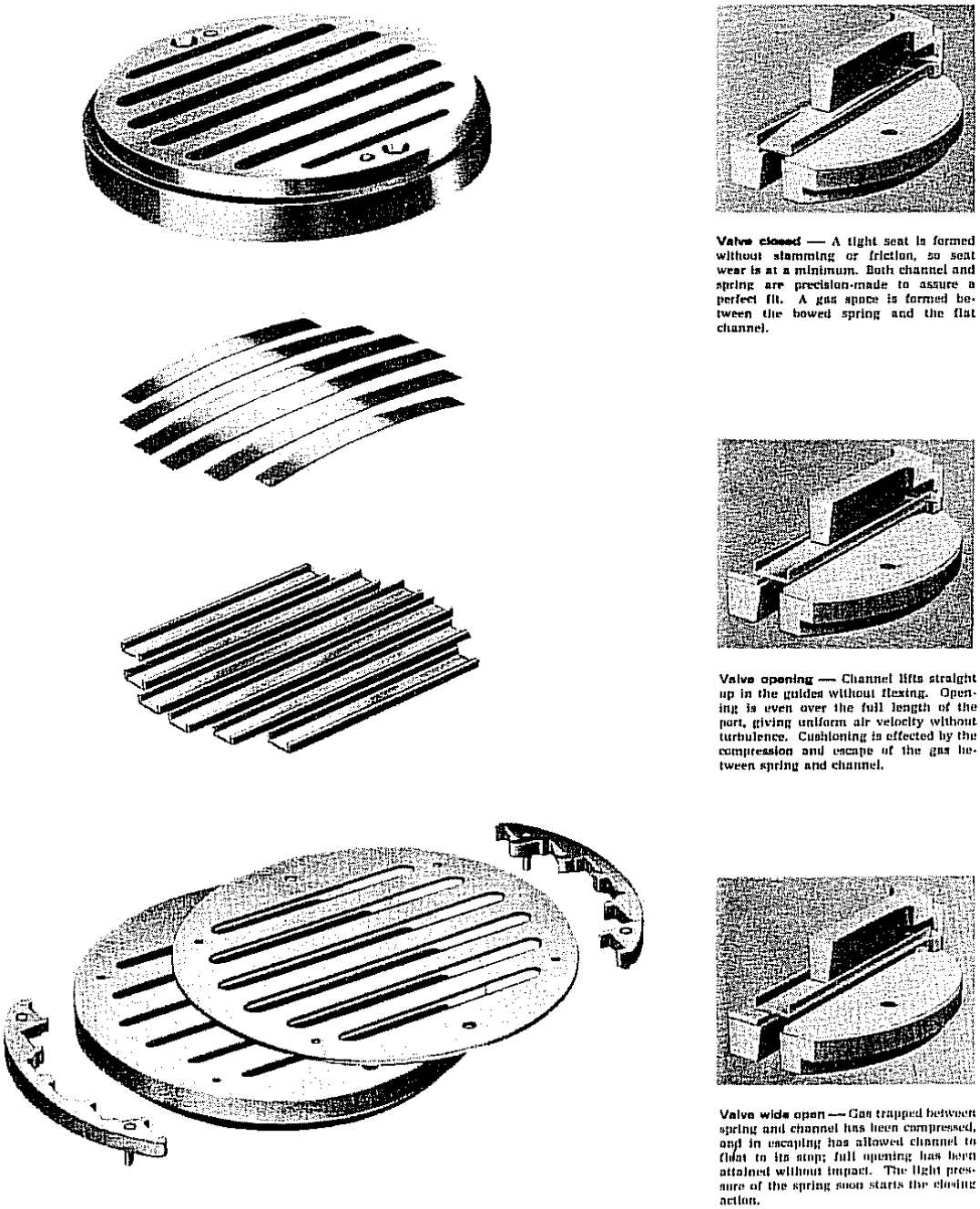

Compressors can be single or double acting. In a single acting compressor only one face of the piston is effective and work is being done in only one stroke direction. Both faces of a double acting compressor are effective and work is being done in both stroke directions.

4.1.1 Operating Curves

Diagrams of a reciprocating compressor cycle are shown in Figure 5. For simplicity, a single acting piston has been shown.

Figure 5
Reciprocating Compressor Cycle

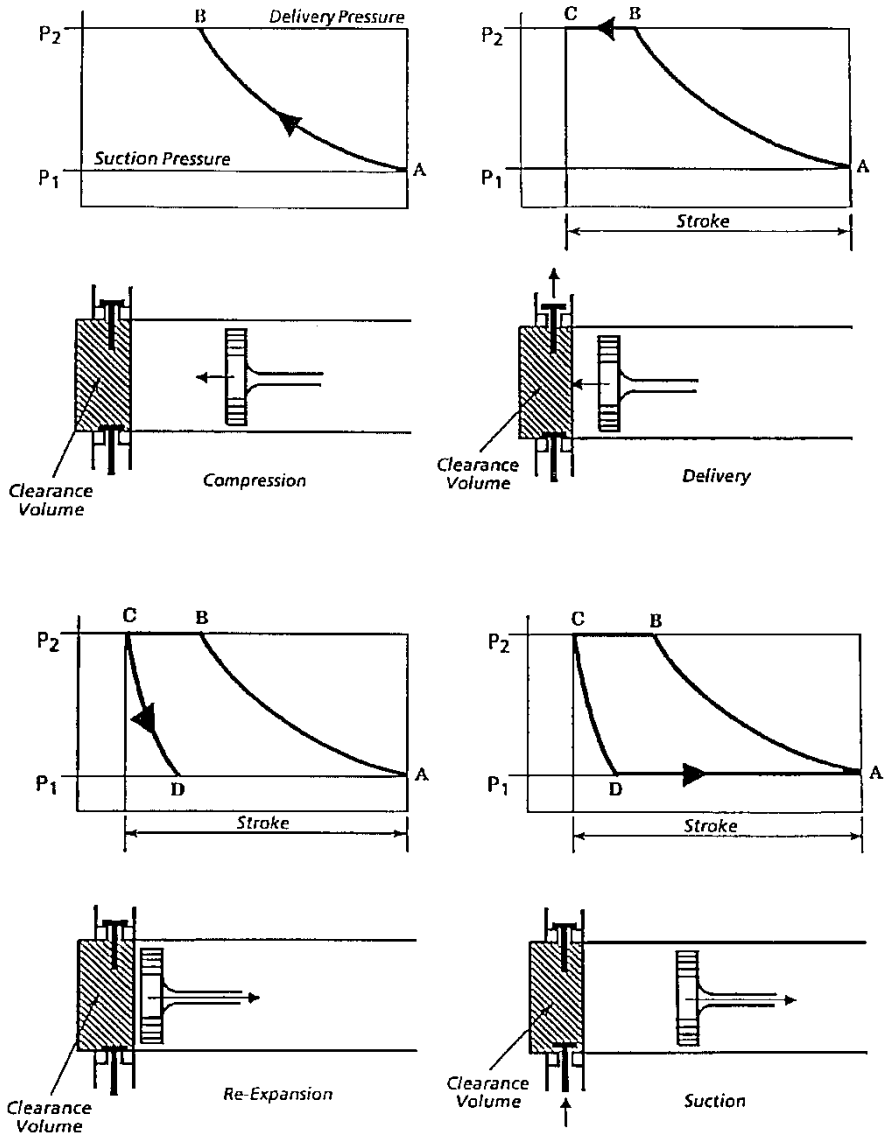

In theory the compressor cylinder is full of gas at the suction pressure. Point "A" represents the beginning of the compression phase. The gas pressure increases as the piston moves along the cylinder until it reaches the delivery pressure at point "B". At this point the delivery valve opens and gas is delivered to the system up to point "C" at the end of the piston's stroke. The piston now reverses direction and the gas trapped in the clearance volume at the end of the compression/delivery stroke now re-expands until point "D" is reached. At this point in the cycle, the suction valve opens and gas is drawn into the cylinder for the remainder of the suction stroke. This brings us

back to point "A" and the cycle is repeated. We have assumed that compression and re-expansion have taken place adiabatically for this discussion.

In practice the cycle differs from the theoretical in two respects.

Figure 6
Typical Compressor Indicator Diagram

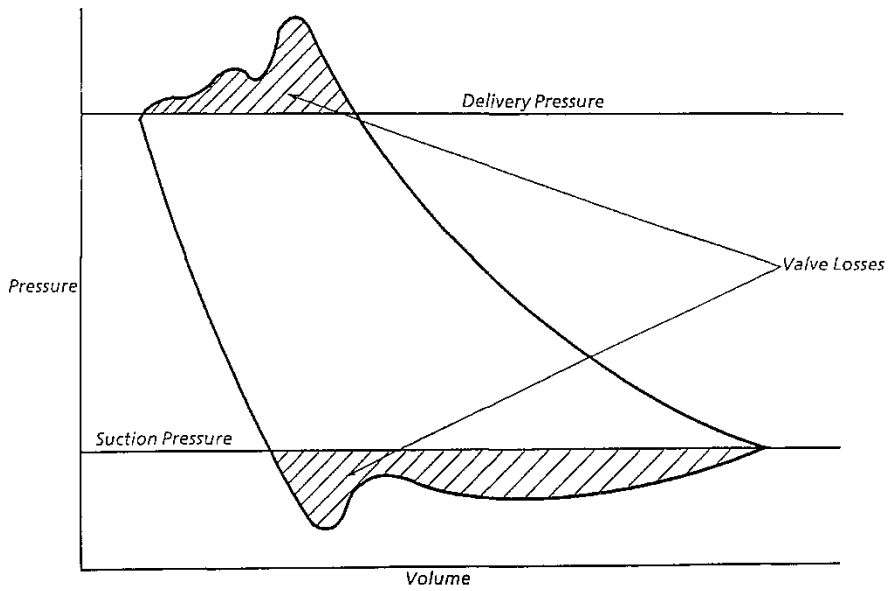

These are shown on Figure 6, a typical reciprocating compressor indicator diagram (PV diagram), and described as follows:

a. To achieve a flow of gas through the delivery valve the gas pressure must be higher than the external system pressure. Also there must be a corresponding depression in gas pressure during the suction phase to enable gas to be drawn into the cylinder. As a result of these valve losses (including also inertia losses) the PV diagram (indicator diagram) looks quite different to the theoretical diagram.

b. Compression and re-expansion do not simply follow adiabatic curves. (Friction between the piston rings and the cylinder can cause serious deviation from adiabatic compression in some cases, and for this reason it is often decided to introduce cooling to the cylinder by means of jacket cooling). However, the actual compression mode is dependent to a large extent on the design parameters of the compressor itself so that global overall corrections are not practicable. However, compression is generally sufficiently near to adiabatic for preliminary assessment purposes.

Due to re-expansion of the gas which is trapped in the clearance volume, induction of fresh gas does not take place during the whole of the suction stroke.

The ratio of induced gas volume to cylinder swept volume is known as the volumetric efficiency. This efficiency affects the output achieved by the compressor but does not affect the overall efficiency of the compressor.

The theoretical volumetric efficiency is given by the following equation (assuming adiabatic re-expansion):

$$\lambda \text{ vol.} = 100 - c\ (r^{1/k} - 1)\ \%$$

where

"r" is the pressure ratio,

"k" is the adiabatic exponent

and

"c" is the clearance volume expressed as a percentage of the swept volume.

The value derived from the above equation is not strictly correct due to factors such as gas leakage past piston rings during the compression stroke, pre-heating of intake gas, gas friction and pressure loss through valves which result in a lowering of the volumetric efficiency. The extent of this reduction depends upon the gas properties, pressure ratio and also on whether the compressor has lubricated cylinders or not. A typical reduction in the theoretical value is in the range 3% to 5%, but this can go as high as 10%.

Table 1 shows the effect of pressure ratio, clearance volume and "k" value on the theoretical volumetric efficiency. It will be seen that for high values of the first two of the above parameters the value of the volumetric efficiency is greatly reduced. Low values of "k" have the same effect.

Table 1

Theoretical Volumetric Efficiency				
Clearance Volume C% λ_v	For K = 1.7	K = 1.4	K = 1.3	K = 1.1
10	*95.0% **(87.4%)	93.6% (83.1%)	93.0% (81.0%)	91.2% (74.7%)
20	89.9% (74.8%)	87.2% (66.2%)	85.9% (61.9%)	82.4% (49.5%)
30	84.9% (62.2%)	80.8% (49.2%)	78.9% (42.9%)	73.7% (24.2%)
* For pressure ratio of 2 to 1 ** For pressure ratio of 4 to 1				

It may be thought that if the clearance volume could be reduced to zero the volumetric efficiency would be 100%. Unfortunately this is not possible since there must be clearance for the piston at the end of the stroke and also there are inevitable dead spaces associated with the valves. If the volumetric efficiency is increased by reducing the number of valves a penalty is incurred in the form of higher valve losses, leading to lower compression efficiency. Normal clearance volume figures range from 5 to 15% but this can go up to 20% or higher, depending upon the compressor detail design.

Theoretical Power and Discharge Temperature Calculations

a. Power

From the basic gas laws, ignoring friction:

$$\text{Work done} = \int_{P_1}^{P_2} v\, dp$$

where

"v" is the specific volume

P_1 is the absolute suction pressure, and

P_2 is the absolute delivery pressure.

For adiabatic compression, "P" and "v" follow the law Pv^k = constant. Therefore substituting this in the above equation, integrating, and correcting for practical units, we get:

$$\text{Shaft power} = 28.1 \frac{k}{k-1} \left\{ \left[\frac{P_2}{P_1} \right]^{(k-1)/k} - 1 \right\} \text{ in kW}$$

Per 1000 m^3/h (measured at atmospheric pressure and actual suction temperature).

To obtain the value of shaft power absorbed, the theoretical power must be divided by the overall compressor efficiency.

The following graph (Figure 7) can be used to obtain a rough estimate of overall stage efficiency.

Figure 7
Overall Stage Efficiency for Reciprocating Compressors

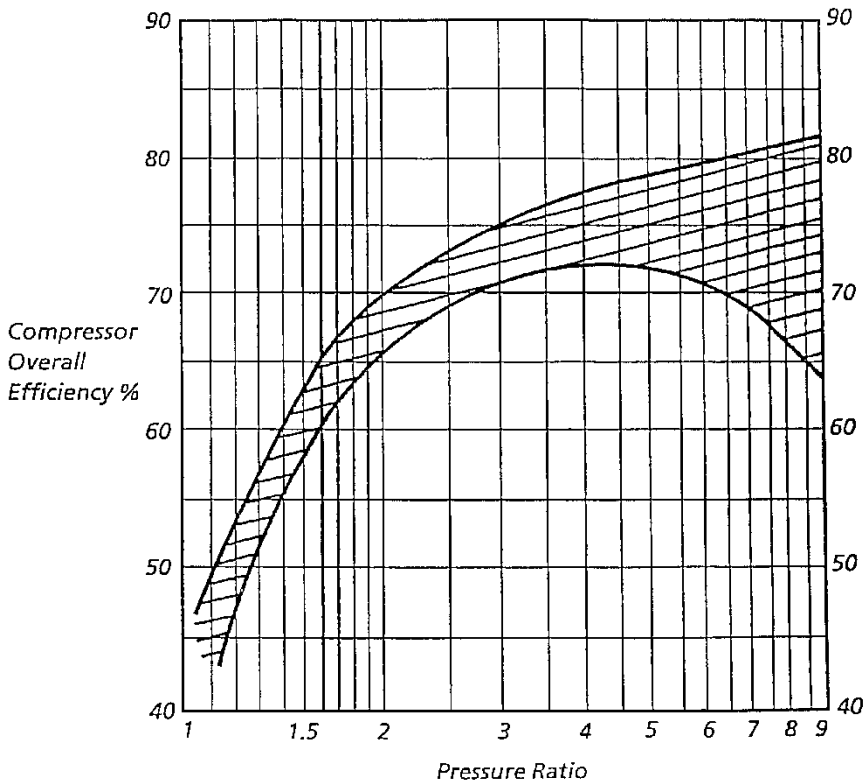

b. Discharge Temperature

The discharge temperature is given by the equation:

$$\frac{T_2}{T_1} = \left[\frac{P_2}{P_1} \right]^{(k-1)/k}$$

This is based on adiabatic compression and absolute values of temperature.

At full-load reciprocating compressors do not perform as well as rotary screw machines, but they do unload more linearly than screw compressors. For this reason reciprocating compressors are better suited for systems that have high load variability.

4.1.2 Noise and Vibration and Their Control

Q3

The noise produced by a reciprocating air compressor is a function of horsepower - the number of cylinders, bore and stroke (whether single-acting or double-acting), speed (rpm), type of gas and compression ratio. The compressor size (hp) and/or compression ratio are the major factors, and noise is generated during both the intake and discharge cycle of operation.

Reciprocating compressors are widely used in plant and process air service, i.e. single-stage, single-cylinder (DA), at 600 to 900 rpm. The predominant component noise sources are:

a. Air intake (atmospheric)
b. Discharge piping
c. Casing and driver (engine, motor, etc.)

The air intake system is typically provided with a filter and silencer or a filter/silencer combination. The filter may be either a media impingement or inertial type as recommended by the compressor manufacturer. The silencer must be a multi-chamber reactive type.

Reciprocating compressors produce both noise and pulsation. Unsilenced, large-bore, low-speed air compressors generate an audible intake noise that is almost always a problem. In addition, it can produce low-frequency noise known as “airborne pulsation,” causing walls, windows and doors to vibrate, even at considerable distances from the installation.

When the intake is not provided with the proper type and size silencer, the adverse effects of pulsation may starve the cylinder, reduce the volumetric efficiency of the compressor, reduce the efficiency of the filter and increase both the intake and radiated piping noise. Comparative pulsation levels are shown in Figure 8.

Figure 8
Typical Reciprocating Compressor Pulsation Levels

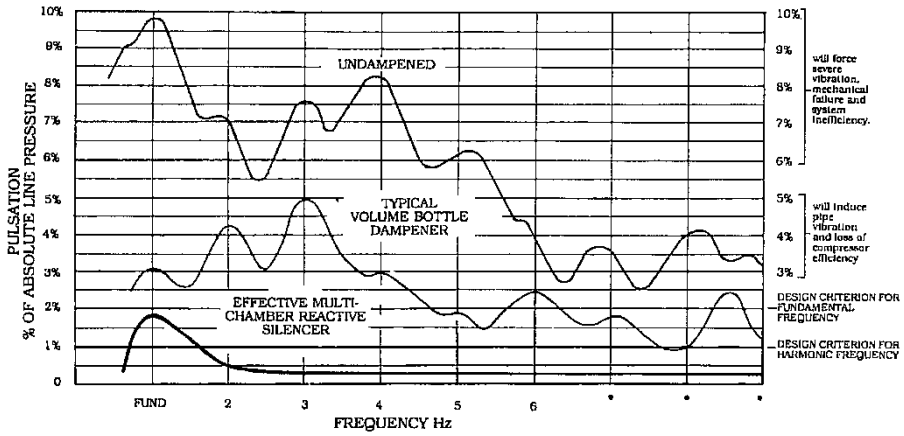

Pulsation is as evident in the intake piping of a reciprocating compressor as it is in the discharge. Consider: (a) the intake side of a compressor with the piston receding from the discharge, preparatory to calling for more air, and (b) the reflected pulse in the pipe moving away from the intake valve of the compressor, pulling a pressure void at the cylinder. When these two conditions are simultaneous, the line pressure at the intake valve is below normal for the duration of the intake cycle. The reduced pressure condition (when the air surges into the compressor intake as the valve opens) decreases volumetric efficiency since the cylinder is charged with gas having lower-than-desired density.

When the predominant frequencies produced by a reciprocating compressor coincide with the natural frequencies of the intake system, an adverse noise and pulsation condition can develop. To avoid this:

a. The length of intake piping should be held to a minimum - not to exceed 2/3 of the ¼ wave (λ) length of the fundamental compressor frequency f1. Avoid the ¼ λ and integers thereof.

b. The silencer should be "close-coupled" to the cylinder where possible.

Close-coupling generally implies not more than 3 pipe diameters or a maximum of 50 cm of connecting pipe between the compressor connection and the silencer. This ratio of pipe length to diameter generally keeps the compressor valve-to-silencer distance within ten diameters, resulting in reduced noise levels with no measurable net pumping losses across the system.

In instances where a compressor has more than one first stage cylinder, the cylinder crank angles must be taken into account when sizing a special manifold-type silencer for multi-cylinder applications.

The total intake system pressure drop – including the filter, silencer and piping - is generally limited to 1.5 kPa to 2.5 kPa. In order to meet the air supply requirements of a compressor (100-hp and above), the pressure drop across the silencer should not exceed 0.75 to 1.5 kPa.

4.1.3 Parallel Operation

The following comments assume that the two compressors have a similar design.

Reciprocating compressors have little performance degradation when unloaded, so the relative load distribution between two equal sized compressors is not very important. Splitting the load to equalize pressure losses in the suction line yields optimal performance because this minimizes suction line losses. When unequal sized compressors are operating in parallel, the load should be split proportionally between them so as to also minimize the pressure drop in the suction lines.

In some situations where one base loaded compressor can normally satisfy the requirements of the system, we often find that the control system is set up in a master/slave configuration where one compressor runs all of the time, loaded or unloaded as required. When the system demand exceeds the capacity of the base load compressor, the second compressor comes on-line to satisfy the additional load required. The second compressor will run loaded or partially loaded until it is no longer needed to supply the demand. It would then be shut down.

See section 4.3.3 below for the rare case of a reciprocating compressor operating in parallel with a screw compressor.

4.2 Centrifugal Compressors

Q4

Unlike rotary screw compressors, reciprocating compressors, and vane compressors, centrifugal compressors are not considered to be positive-displacement compressors. Centrifugal compressors are mass-flow (dynamic) compressors because they use the velocity of the incoming gas to create pressure.

Centrifugal compressors consist of a spinning impeller and a stationary diffuser. The high-speed impeller (which sometimes spins at speeds as high as 50,000 rpm) increases the velocity of the gas and sends it to the diffuser. The diffuser is a specially shaped chamber that increases the pressure of the fast-flowing gas as it slows it down.

The capabilities of a single-stage centrifugal compressor are quite limited so they often come with 2-4 or more stages with an intercooler between each stage. As the temperature of gas increases, it becomes increasingly difficult to compress. By using intercoolers between stages, the overall efficiency of the compressor is increased.

The operating life of a centrifugal compressor is basically determined by the cleanliness of the gas entering the compressor. The high speed of the impeller makes it very sensitive to contaminants and liquid within the inlet gas.

For high-volume (3,500 m^3/h - 40,000 m^3/h), continuous-duty applications, centrifugal compressors are a good choice. In fact in the 1,000+ hp range, centrifugal compressors are the only choice.

4.2.1 Operating Curves

Q5

A centrifugal compressor must not only meet its intended design head and flow rates, but also many intermediate conditions. A typical compressor performance curve indicates the range of flows at delivery heads and at various constant speeds that the centrifugal compressor has.

The phenomenon of surge occurs in a centrifugal compressor when inlet flow is sufficiently reduced to cause momentary reversal of flow in the compressor. An intense surge is capable of destroying components in the compressor; therefore, it must be considered in conjunction with any capacity control scheme.

It is essential to know where the surge region occurs on any centrifugal compressor. During start-up the compressor might pass through this region, but it should not run constantly in this region. Prolonged operation in the surge region may cause overheating and damage to thrust bearings and seals. In designing an antisurge control system for a centrifugal compressor, strict attention must be paid to controlling characteristics which define the surge region.

A typical centrifugal compressor characteristic curve, see Figure 9, shows that the compressor may operate within a wide range of flows at various delivery heads. If the system head-flow characteristic is also plotted, then the point where it intersects the compressor characteristic curve is the operating point of the compressor. In some applications it is possible to match the compressor to the system requirements without the use of any capacity control; however, this is unusual.

Figure 9
Centrifugal Compressor Characteristics

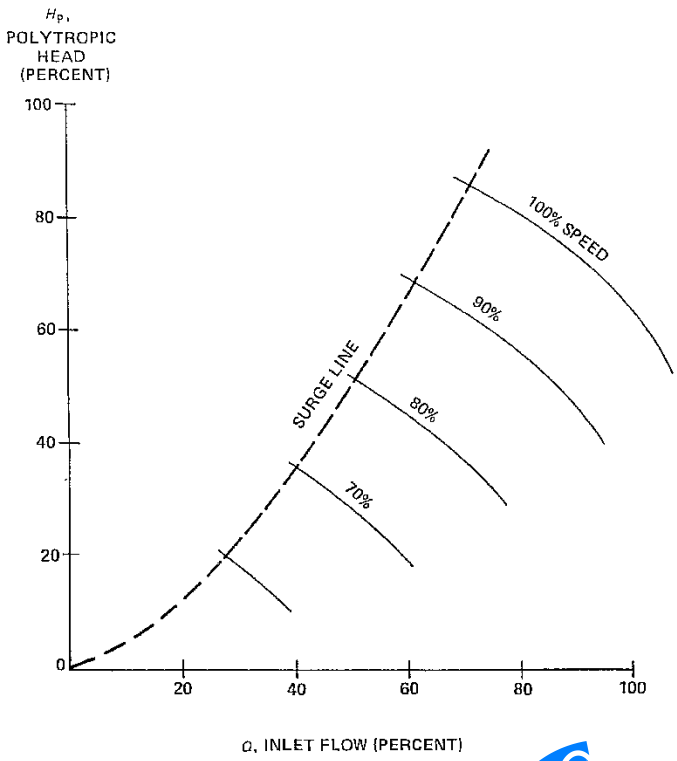

4.2.2 Vibration and Vibration Control

Q6

In a centrifugal compressor, the dominant noise component is typically generated by high velocity gas in the impeller exit / diffuser entrance region, and occurs at the impeller blade passing frequency. This noise level increases when vanes are installed in the diffuser due to the aerodynamic interaction between the impeller and the diffuser vanes. Recent advances in acoustical technology have made it possible to reduce noise and vibration emanating from centrifugal compressors through the use of duct resonator arrays.

Noise problems can be addressed in three ways:

- By reducing the strength of the noise at its source.
- By minimizing the transmission paths (e.g., covering the noisy structure with a acoustic insulation or an enclosure).
- By interrupting or minimizing the noise before it reaches the receiver (e.g., wearing earplugs).

For turbomachinery, the historical approach to noise control has been to build a barrier between the noise source and receiver with items like enclosures, lagging, or acoustic insulation. This approach is typically very expensive, increases weight, reduces accessibility and does nothing to address the source of the noise. Reducing noise at the

source is always the most desirable solution, but often more difficult to implement.

A duct resonator array attacks the noise at its source. To accommodate a duct resonator array in a centrifugal compressor a recess is cut on each side of the diffuser wall and the array is rail-fitted or bolted to the diffuser wall. The volume, cross-sectional area, length, and other geometric parameters are specifically designed for each application. This allows for tuning of the duct resonator array to deliver maximum sound reduction at the compressor blade passing frequency, where the noise level is generally of the highest magnitude.

Excessive compressor noise can oftentimes result in vibration of the process piping, which can lead to structural damage and failure of pipe-mounted instrumentation. By reducing the noise level at its source, the duct resonator array also reduces the resulting pipe vibrations, reducing the potential for structural damage and instrumentation failures. Duct resonator arrays have been field proven to reduce compressor noise and piping vibration in both single and multi-stage compressors.

A duct resonator array can be applied to almost any compressor to reduce compressor noise and/or process piping vibration levels. However, the following issue must be considered when assessing the feasibility of a duct resonator retrofit to an existing compressor.

- There must be sufficient radial space in the existing diffuser wall in order to accommodate the duct resonator array. Furthermore, the existing diffuser wall must be thick enough to allow machining of the recess required for the installation of the duct resonator array, while still maintaining structural integrity.

- The existing diffuser width must be considered before applying a duct resonator array. Factory testing has shown that special measures must be employed to properly apply a duct resonator array when the existing compressor diffuser width is very narrow.

To develop an economic justification for a duct resonator array retrofit to an existing compressor, the costs of the retrofit project to the costs and effectiveness of other noise attenuation methods must be compared:

- Cost of doing nothing. There is a cost associated with taking no action to reduce noise or piping vibration. This cost could be in the form of financial penalties for non-compliance with federal environmental regulations or local ordinances. If piping vibration is an issue, there will be a cost associated with the damage or failure of locally mounted instrumentation,

- Cost of removing the compressor diffuser vanes. While this may be effective at reducing noise and vibrations, there is an associated

cost in the form of reduced compressor efficiency and/or reduced compressor operating range. This can result in increased operating expenses and reduced process output.

- Cost of traditional noise attenuation methods. As mentioned previously, the traditional approach to turbomachinery noise control has been to install enclosures, lagging, or acoustic insulation on the compressor, creating a barrier between the noise source and receiver. This approach is typically more expensive and less effective than a duct resonator array because it does not address the source of the noise. There is also an increased maintenance cost associated with physical barriers, as they reduce accessibility to the equipment.

The noise produced by centrifugal compressors may exceed 120 dBA, depending on size, rpm and service, and consists primarily of discrete tones interdispersed over a broad-band frequency spectrum of lesser intensity. The maximum amplitude occurs at the blade-passing frequency and its second harmonic:

$$\text{Blade Passing Frequency} = \frac{N \times rpm}{60} = Hz$$

Where N = Number of rotating blades.

Large high-speed compressors may require partial or total isolation of the compressor casing, gear unit and/or driver to prevent radiation of high-frequency noise. Isolation can be in the form of acoustical lagging, a partial housing or total housing around the combined unit.

The Importance of proper sizing of intake and discharge piping for centrifugal and axial-flow compressors cannot be over-emphasized. Large inlet piping does not necessarily produce less noise. (Actually it may increase the noise at the intake.) But larger discharge piping (reduced velocities) is an effective way to reduce piping noise.

Both intake and discharge silencing is normally required. However, in many atmospheric intake services, only intake silencers are needed. The most effective silencer is the low pressure-drop, dissipative type. All silencers should be close-coupled to the compressor when possible to prevent excessive pipe-radiated noise.

Silencer velocities normally range from 5,000 to 10,000 m^3/h. Maximum velocity acoustically should not exceed 12,750 m^3/h. Actual silencer sizing depends on the allowable pressure drop and size of piping. Maximum drop is generally 0.5 to 1.0 kPa depending on the size of the compressor and the operating conditions.

The predominant compressor noise source is the atmospheric intake. The compressor itself is normally of heavy cast material which minimizes the radiation of casing noise. The other major noise source is the discharge, which may radiate through the piping, headers and the entire discharge system to create a serious and demanding noise problem in adjoining areas.

Centrifugal compressor noise is produced primarily by blade-tip turbulence which is a function of horsepower, speed (rpm), mass flow, discharge pressure, number of stages of compression, type of gas, piping velocities and inline restrictions - elbows, reducers and the like.

High-speed compressors are inherently noisier than low-speed units. And too, doubling of the horsepower typically results in a noise increase of 4 to 5 dB. The compressor manufacturer can provide the unsilenced Lw or Lp needed for acoustic analysis and silencer selection.

Silencer and piping guidelines for large high-speed blowers and compressors should include, but not necessarily be limited to, the following considerations:

1. Straight runs of piping should be used where possible, avoiding excessive use of elbows, reducers and other restrictive components.

2. For best overall performance, the silencer should be bolted directly to the compressor. Depending on size and service, an expansion joint and possibly an elbow at the compressor connection, may be necessary. (Even this limited amount of piping may require external acoustical lagging to prevent radiated noise.) Additional lengths of piping between the compressor and the silencer are not recommended.

3. The silencer may be a dissipative-type or reactive/dissipative combination, depending on blower or compressor type and service.

4. Where internal acoustic fill is not permitted, the silencer may be reactive (multi-chamber) type with external acoustic lagging. The entire length of the silencer shell and the silencer head on the compressor side should be acoustically lagged and jacketed by the silencer manufacturer.

5. Typically the lagging is 50 to 100 mm thick fiberglass (50 to 100 kg/m^3 in density) or mineral wool (65 to 130 kg/m^3 density) with aluminum or steel jacket (overlapped and banded tightly).

4.2.3 Parallel Operation

Q7

There may be a time when it could be desirable to share a given load between two or more compressors. If the characteristic head / capacity curves of the individual centrifugal compressors were identical and the piping resistances were equal, two or more compressors could be operated in parallel with little problem. However, this is almost never the case and it becomes necessary to install special control over each machine to ensure that it will take only its proportionate share of the total capacity. As a rule, when paralleling centrifugal compressors, it is advisable to select compressors that have their characteristics as similar as possible. Dissimilar machines have been paralleled, but control requirements are extensive and the possibility of operational problems is significant.

To prevent the interaction of compressors, minimum flow controllers and/or individual anti-surge control schemes should be provided for each machine. Individual by-pass lines should he installed so that each compressor may be started separately. The design of the suction piping should be given careful consideration to ensure the proper even distribution of gas volumes to each compressor.

The range of capacities available, the reliability of centrifugal compressors and the cost difference between one larger machine and two or more smaller machines generally supports the selection of a single compressor.

Figure 10
Typical Arrangement of Two Centrifugal Compressors in Parallel

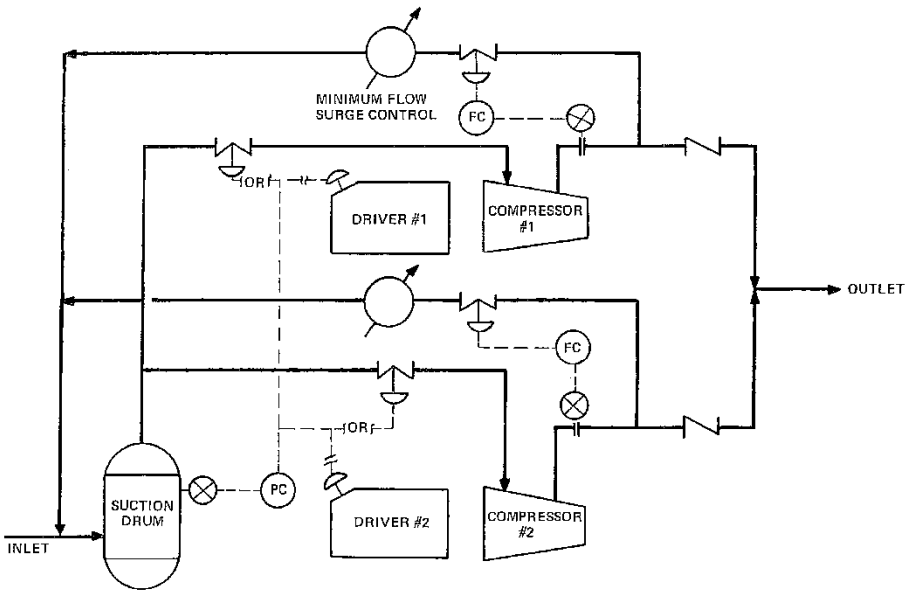

4.3 Rotary Screw Compressors

Q8

Although the rotary screw compressor has been around for over 50 years, due to the low efficiency of the design, it was used almost exclusively in engine-driven, low-power applications. However, with the development of two-stage machines and the refinement of the screw profile, the screw compressor has now found use in many industrial applications.

Rotary screw compressors have become a popular compressor for plant and instrument air service. They have also found a niche in refrigeration service and are particularly suited for ammonia based refrigeration systems.

A rotary screw compressor is a positive displacement device. Like a reciprocating compressor, the gas pressure is increased due to a reduction in volume, following the real gas laws. However, the process by which the volume is reduced in a rotary screw compressor is significantly different than the volume reduction process in a reciprocating compressor.

The compression process in a rotary screw compressor occurs in three dimensions. Therefore, it is often difficult to show the process using two-dimensional drawings.

Figure 11 below shows common rotor terminology. The flutes are the open areas between lobes that fill with gas. A reciprocating compressor equivalent would be a cylinder. The lobes separate the different flute spaces, and then also mesh with the flute spaces to reduce flute volume and compress the gas. In reciprocating compressor terms, the lobes are pistons.

Figure 11
Common Rotor Terminology

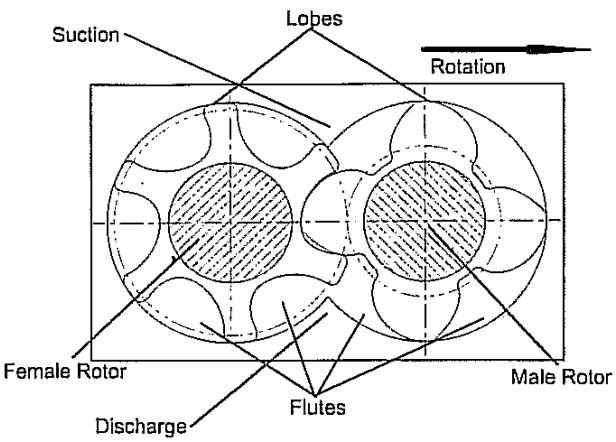

Ariel Corporation

4.3.1 Operating Curves

Most screw compressors can modulate their capacity from approximately 10% to full 100% load. This is generally accomplished

by using an internal slide valve, which is shortened or lengthened to control the suction volume. Below about 50% of full-load capacity, the efficiency of a screw compressor decreases significantly. Therefore the proper sizing and control of a screw compressor is critical. Screw compressors should not be grossly oversized.

The Pressure-Volume card, shown in Figure 12, can be used to explain the compression process in rotary screw compressors. At the beginning of the compression cycle, gas at suction pressure fills the flute spaces as the rotors unmesh under the suction flange. Gas continues to fill the flute spaces, until the trailing lobe crosses the inlet port. At that point, the gas is trapped inside the flute space. This is defined as the inlet volume, in actual volume terms.

Figure 12
Theoretical P-V Card for Rotary Screw Compressors

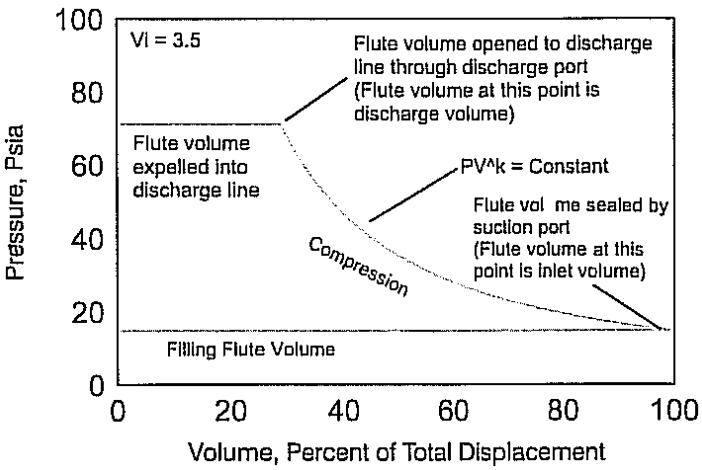

Ariel Corporation

On the underside of the rotary screw compressor, the rotors begin to mesh. As the lobe meshes into the flute space, the flute volume is reduced, causing the pressure to increase. The volume reduction and subsequent pressure increase will continue as long as the gas is trapped in the flute space.

Gas is discharged from the flute space when the leading lobe crosses the discharge port. The actual volume at this point in the compression cycle is defined as the discharge volume.

There is a volume of gas remaining in the flute space after the leading lobe crosses the discharge port. Further rotation and meshing of the rotors forces this gas from the flute space into the discharge line. However, there is no additional pressure increase as a result of this volume reduction, since the flute space is no longer sealed.

An oil lubricated rotary screw compressor has no clearance, so there is no clearance expansion at the end of the discharge event.

Theoretically, a rotary screw compressor would have 100% volumetric efficiency, but there is not a gas-tight seal between the rotors and between the rotors and the housing. This causes leakage between flutes and lowers the volumetric efficiency. Leakage is a function of compressor tip speed and pressure difference, and will decrease the inlet volume to about 90% of displacement.

Note: Dry running (oil-free) rotary screw compressors must have clearances and there will be a loss in volumetric efficiency due to this.

4.3.2 Vibration and Vibration Control

Unlike reciprocating compressors where vibration is inherent due to their design, rotary screw machines run smoothly with virtually no vibration. If any significant vibration becomes evident in a screw machine, it is a sign of a potentially serious problem. For this reason vibration probes should be installed.

4.3.3 Parallel Operation

Q9

The load should be split equally between two screw compressors operating in parallel for system loads of less than 65% to 70% of full capacity. Once the system load is greater than 65% to 70% of full capacity, one compressor should be run fully loaded and the other should be used to satisfy the balance of the load.

Since screw compressor performance deteriorates significantly at loads of less than 50%, when operating two compressors of unequal capacity in parallel, the following procedure is recommended. Try to avoid operating any individual compressor at less than 70% load. For intermediate loads, the smaller compressor should be fully loaded and the larger compressor should not be operated. For higher loads the larger compressor should be fully loaded. Note the general rule that screw compressors should be run as fully loaded as practical. If the screw compressors are equipped with side-inlet economizer ports, a detailed analysis should be made to determine the best operating modes, but the general rule still remains valid in most cases.

For the unique and rare case of a reciprocating compressor and a screw compressor operating in parallel, the screw compressor should be set to handle the base load and the reciprocating compressor should be used to satisfy the varying load.

4.4 Axial Flow Compressors

Q10

Since axial flow compressors evolved from and are similar to centrifugal compressors in so many ways, this discussion will focus on the differences between the two. Both are, of course, dynamic machines. Axial flow compressors are principally low and moderate pressure, large capacity

machines. Capacities range from 40,000 im^3/h to over 1,500,000 im^3/h with pressures generally well below 700 kPa. Higher pressure machines have been furnished up to 3500 kPa for certain special custom designed cases. Horsepower may exceed 100,000 hp. Compression ratios on air vary between 2 and 5, with a maximum of about 7 for a large unit in a single casing. Axial compressors on the low end of their capacity range (40,000 im^3/h to 120,000 im^3/h) overlap with the upper range of centrifugal compressors. Above this range axial compressors are the machine of choice. In the overlapping range, a careful analysis of initial cost, operating costs, space requirements and driver considerations must be performed before a selection is made.

An axial compressor is generally much smaller and lighter in weight than its equivalent centrifugal counterpart. In high flow applications the axial machine is also likely to be a better match for the drivers that will probably be chosen.

4.4.1 Operating Curves

Compared to centrifugal compressors, the axial flow compressor has the following characteristics:

a. The head-capacity curve is much steeper than that of a centrifugal compressor. Therefore, the operating range between the normal and surge is much less. The range can be extended somewhat by using adjustable stator blades. A typical comparison of an axial flow machine with a centrifugal machine is shown in Figure 13.

Figure 13
Comparison of Axial and Centrifugal Characteristic Curves

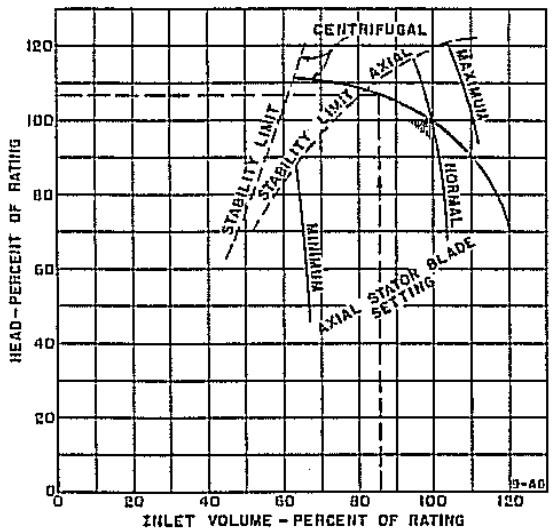

The effect of blade adjustment on axial performance is shown.
The surge limit for each type and axial blade is dotted.

b. The efficiency will generally be better than the centrifugal compressor. A comparison of power requirements is shown in

Figure 14. Note that the variation of power with inlet volume of the axial is opposite to the centrifugal.

Figure 14
Comparison of Axial and Centrifugal Characteristic Curves

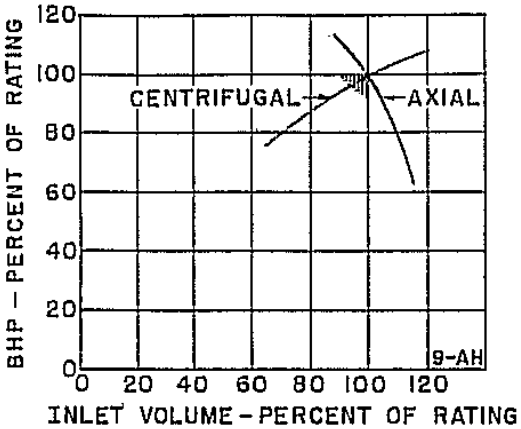

c. Axial compressors will have less rise per stage than a centrifugal and will require more stages for a given total pressure rise.

d. The on-line availability of the axial compressor will be about the same as the centrifugal compressor, but it is more sensitive to erosion and corrosion.

4.4.2 Vibration and Vibration Control

The noise problems of axial compressors are similar to those of centrifugal compressors and should be addressed in the same way as discussed in Section 4.2.2 of this guide.

Due to the inner and outer shrouding of the fixed stators and the internal shrouding and casing support of the variable stators, vibrations can occur at component natural frequencies, but the resulting stresses in these components are of little concern. However, if a manufacturer does not use shrouds on both the inner and outer surfaces, it is important that the frequency analysis of the stationary vanes be reviewed. Since the rotor blades are mounted in a cantilevered beam arrangement with one end unsupported, natural frequency excitation, and the resulting stresses must be thoroughly analyzed by the designer.

Clear definition of the natural frequencies of the blading, possible sources of excitation within the unit and the resulting stress levels should be provided by the manufacturer. This should be presented in the form of Campbell and Goodman Diagrams for the compressor blading. Evidence of the accuracy of the information, in the form of test data or successful long-term operating experience, should be made available by the manufacturer and should be reviewed by the purchaser.

Similar scrutiny is appropriate for thrust bearing design. These units should be pulsation free except when operating in surge, a situation that should be avoided. Vibration and alignment probes and their associated systems should be furnished in compliance with the existing codes and standards.

4.4.3 Parallel Operation

Axial compressors are very reliable machines and should give several years of uninterrupted service if properly installed and maintained. The cost of an installed spare is prohibitive. Because of the huge capacities available, a single machine can almost always be procured that can satisfy the flow requirements.

4.5 Liquid-Ring Compressors

Q11 Q12

For chemical processing, petroleum refining food preparation, wastewater treatment, ultra-clean processing and for many other purposes, liquid-ring compressors handle air, gases and vapors successfully under the most demanding conditions.

The critical requirements aren't always the same.

In some applications, the materials you are handling tend to destroy your equipment. A compressor with an appropriate seal liquid resists the attack of corrosive gas mixtures. Erosion from entrained abrasive particles causes less damage in a liquid-ring compressor than in dry-type machines. If droplets or even slugs of liquid enter the compressor inlet, they won't damage the compressor.

In other cases, you want to avoid contamination. Then, you can select a seal liquid for your liquid-ring compressor that will be compatible with your product. You can even scrub particulate matter out of your process stream in the compressor itself, and you don't need to worry about contaminating the stream with a compressor lubricant. Liquid-ring compressors sealed with water are used to supply breathing air and medical compressed air for these reasons.

You may need to avoid the steep temperature rise that occurs in conventional compressors. Because the liquid inside it absorbs heat of compression, a liquid ring compressor is often used to handle temperature-sensitive products or dangerously explosive gas mixtures.

If the gas mixture you are compressing contains saturated vapor, you may want to recover that component as a liquid. You can condense and recover it in the compressor system.

A liquid-ring compressor is a positive displacement device. Like a reciprocating and rotary screen compressor, the gas pressure is increased due to a reduction in volume, following the real gas laws. However, the process by which the volume is reduced in a liquid-ring compressor is significantly

different than the volume reduction process in the other positive displacement compressors.

Liquid-ring compressors use rotating seal liquid in lieu of sliding vanes, rotating lobes or reciprocating pistons.

Figure 15 and 16 show common liquid-ring compressor terminology. Figure 15 shows a liquid-ring compressor ideal for low pressure applications (up to 172 kPa) with a cylindrical single lobe body with an offset rotor axis so that one compression cycle occurs during each revolution. These compressors are basically identical to the liquid-ring vacuum pumps. Figure 16 shows an oval double lobe body where it can be seen that there are two compression cycles per revolution.

Figure 15
How a Rotating Band of Seal Liquid Performs the Pumping Action is Shown by this Schematic Diagram

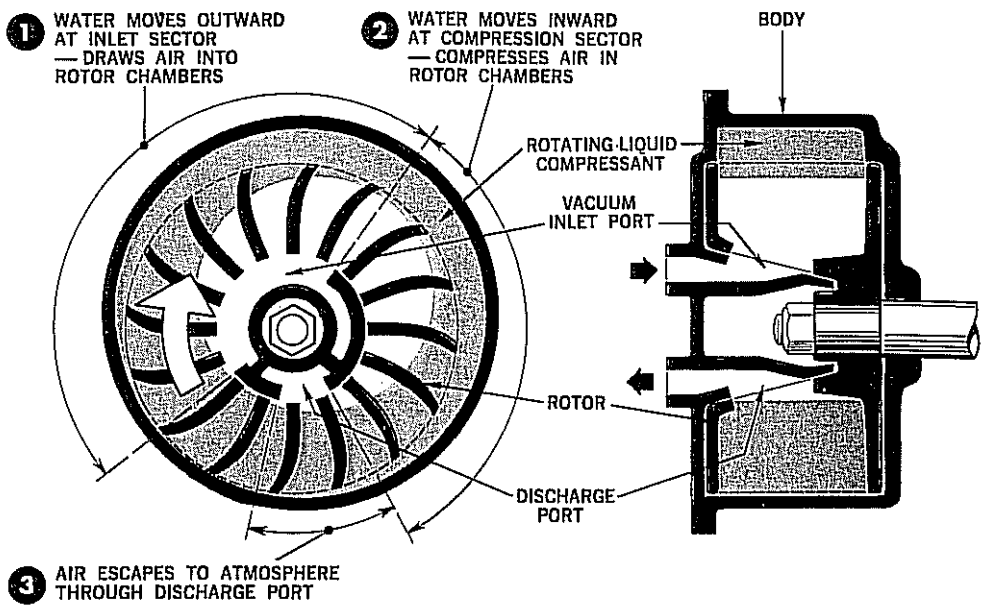

Figure 16
To Visualize the Gas Compression Action, Trace what Happens in a Single Rotor Chamber as it Goes Around a Complete Revolution

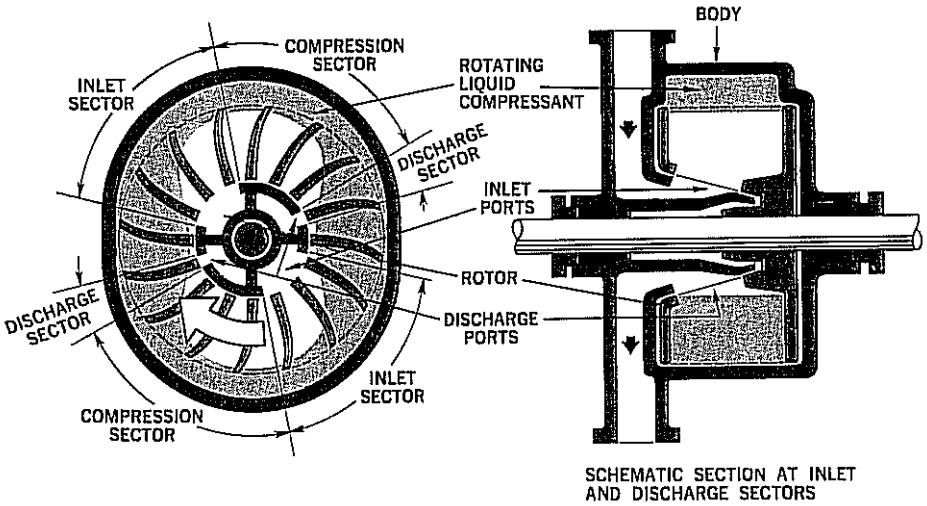

Disadvantages of liquid ring compressors are their higher power consumption, the large quantity of cooling water needed and in some cases the necessity for manufacturing the main parts of the machine of metals resistant to corrosion caused by the sealing liquid. They do have some valuable operational properties so that they are used mainly in severe operating conditions. They are extremely simple. Wear due to friction occurs only in the bearings. The air delivered is cool, free of dust and oil, and can therefore be used directly for clarification, agitation and repumping of liquids in the chemical and food industries without the need for coolers or filters in the delivery line. In addition to this, the absolute humidity of the delivered air is fairly low due to the low compression temperatures.

4.5.1 Operating Curves

Liquid-ring compressors compress gases from a lower pressure (usually atmospheric pressure of surroundings) to a higher pressure. Liquid ring compressors require a fluid (preferably water) as auxiliary or service liquid. Almost all gases and vapors are compressed, even those containing dust and liquids. The service liquid has the task of compressing the gas to be conveyed, sealing off the various discharge chambers from each other, lubricating the shaft seals and absorbing the compression energy as heat.

Liquid ring compressors can also operate in situations where there is a non-atmospheric intake pressure. As long as the operating limits are adhered to, intake pressures in the vacuum range are nothing unusual. For intake pressures above atmospheric pressure there are single-stage special solutions which are employed to ensure an economical compression of the gases being conveyed.

Figure 17
Pressure vs. Capacity Range of Liquid Ring Compressors

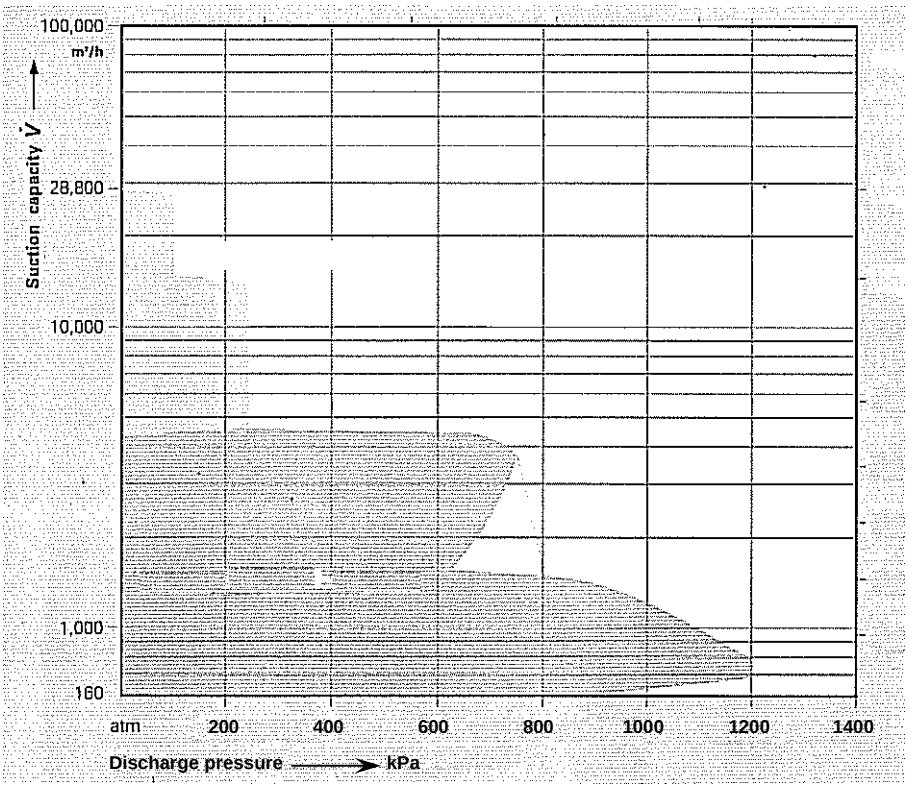

Liquid-ring compressors cover a wide range of capacities up to 28,800 m^3/h and pressures up to.

The compressors designed for operating pressures of or lower are essentially the same machines as the vacuum pumps.

Figure 18
Capacity/Pressure Range of Liquid Ring Technology

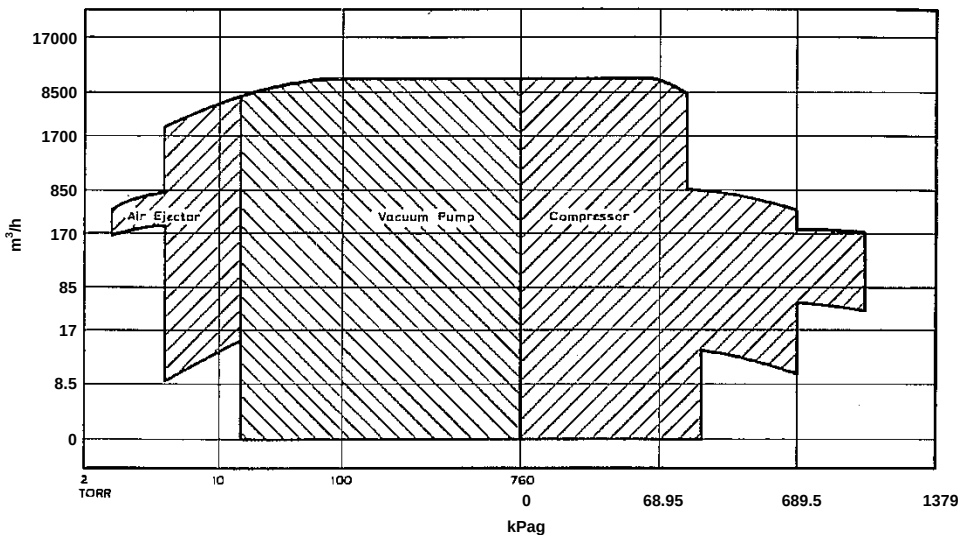

Compressor curves follow the normal industry practice of stating capacity in m^3/h at standard temperature and pressure, (inlet pressure 760 mm Hg Abs. inlet temperature 15°C) and discharge pressure as required.

STP - standard temperature end pressure conditions are:
268K (15°C) and 760 Torr (760mm Hg) in SI units

Note: Standard temperature is 15°C in North America and 0°C in Europe. If using 0°C, one pound mole of gas occupies 10.17 m^3 compared to 10.73 m^3 at 15°C.

Manufacturers of liquid ring compressors specify the pump capacity in terms of dry air at 20°C.

The liquid ring application operates as a displacement compressor, gas cooler, and as a condenser. Consequently, when handling saturated gases, the pump capacity will increase in comparison to its capacity when handling dry gases.

If the inlet gas stream is partially or fully saturated at the inlet temperature and pressure the capacity of the pump will be higher than the dry air curve value. This occurs since the closer the inlet gas stream is to being saturated, the less service liquid evaporation can occur and hence the closer the useful or actual capacity is to the theoretical capacity. Further, if the inlet gas is saturated at a temperature above the service liquid temperature, gas cooling and condensation prior to and in the inlet of the pump will occur, causing a further increase in capacity.

When handling gas mixtures with large amounts of condensables, we must consider the effect of cavitation at the pump discharge side due to lack of non-condensables (the condensables will condense in the pump during compression). The minimum amount of non-condensables should be controlled at all times and should correspond at least to the listed minimum flow (of the particular model) at the lowest suction pressure. This is to ensure that sufficient non-condensables are present at the lowest suction pressure to prevent cavitation.

The most efficient method of handling condensable vapors is by using a condenser.

If a surface condenser is used, in most instances, it is possible to remove the condensate directly through the suction flange of the compressor. This will depend upon the amount of condensate, specific size and operating point of the compressor.

4.5.2 Vibration and Vibration Control

Unlike reciprocating compressors where vibration is inherent due to their design, liquid ring machines run smoothly with virtually no vibration. If any significant vibration becomes evident in a liquid ring, it is a sign of a potentially serious problem. For this reason vibration probes should be installed.

5.0 COMPRESSOR TYPES/MAJOR COMPONENTS

Q13

5.1 Reciprocating Compressors

American Petroleum Institute (API) Standard 618 defines the minimum requirements for Reciprocating Compressors for Petroleum, Chemical and Gas Industry Services.

5.1.1 Temperature and Capacity Limitations

a. High discharge temperature limit can result from a number of factors, including:

High suction temperature.

High compressor pressure ratio.

High value of gas Cp/Cv.

Safety limit, dependent on gas being compressed.

Discharge temperatures are limited on certain applications because of a risk of fire, for example: Lubricated air compressors are not normally run above a 150°C discharge temperature because some lube oils could ignite and cause a fire. Fires in reciprocating compressors are well documented. Valve life and piston ring life are also affected by high discharge temperatures and, even where no obvious limitation exists, a limit of 200°C would normally be fixed for single stage machines and 175°C for multi-stage compressors.

Note that, in the case of lubricated machines, the oil mist tends to reduce the compression temperature to some extent.

b. Where excessive discharge temperature, pressure ratio, or rod loads would exist in a single-stage compressor, a multi-stage compressor, with intercooling, may be used.

Intermediate pressure levels are based on each stage having the same increase in enthalpy. As a first approximation an estimate of intermediate pressures can be derived from assuming equal pressure ratios across all stages.

The discharge temperature would be kept down to a reasonable value, while at the same time there is a power saving, indicated by the shaded area. (See Figure 19.)

Figure 19
Power Saving Due to Multi-Staging

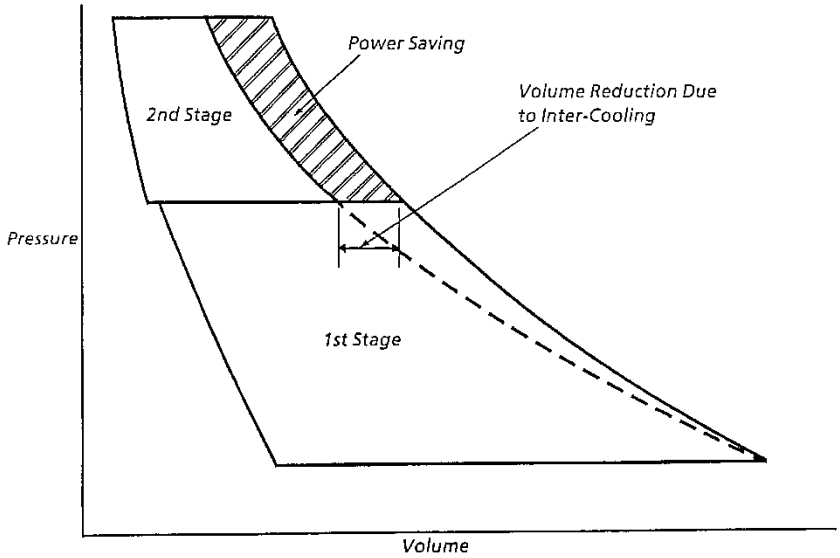

This saving is due to the reduction in volume of the gas caused by intercooling, although it is offset to some extent by pressure losses in the intercooler. As the number of stages increases, the compression approaches the isothermal condition (i.e. k = 1). However, there will be an increase in power due to pressure loss in the intercoolers. An average pressure loss is 3½ % of the cooler inlet pressure.

As the dew point temperature increases with increase of gas pressure (in the case of most gases) it is apparent that aftercooling and inter-cooling will result in the precipitation of water, which is present in the gas in the vapor phase, when the dew point is reached. In these cases it will be necessary to install water separators downstream of the coolers.

If the gas contains corrosive constituents then the cooler/separator design, and materials, must allow for this.

Separating the water vapor from the gas has the effect of reducing the mass flow through subsequent stages of a multi-stage compressor and this will further help to reduce the power requirement.

Figure 20
Effect of Number of Stages on Absorbed Power

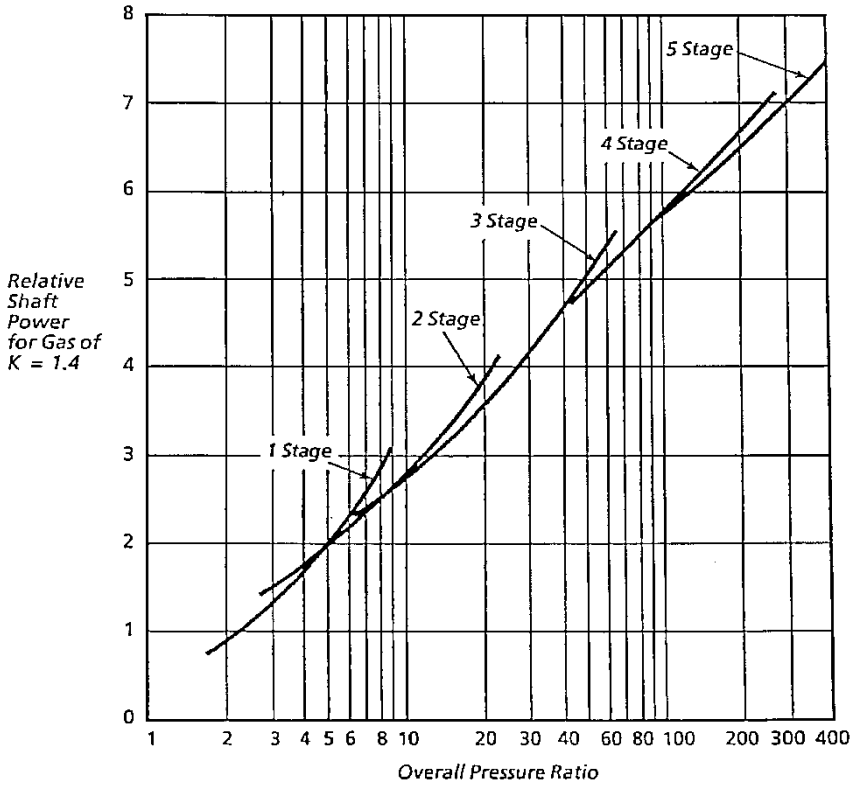

c. Maximum Capacity Limit

This can result from a number of factors, including:

Limitation on the size of the cylinder which is physically available.*

High pressure ratio, which leads to a lower volumetric efficiency.*

Limitation on mean piston speed which has a direct effect on capacity.

High suction temperature which results in a lower mass of gas being sucked into the compressor.

* These can also have the combined effect of producing high rod loading, which can impose a limit on performance.

Q14

5.1.2 Arrangement

Reciprocating compressors come in many different arrangements. Small compressors often have single-acting, trunk-piston cylinders as shown in Figure 21. Larger compressors are of the double-acting, cross-head type as illustrated in Figure 22.

Figure 21
Schematic View of a Single-Acting, Trunk-Piston Machine

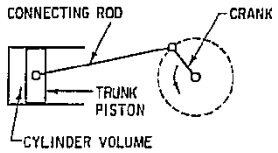

Figure 22
Schematic View of a Double-Acting Compressor Design

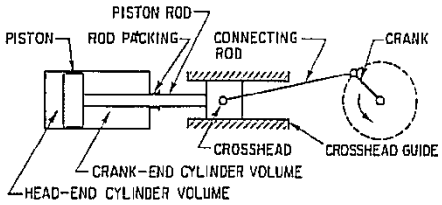

Reciprocating compressors are classified by their duty, their type of lubrication, the arrangement of their cylinders, and their method of cooling.

Reciprocating compressors are selected for moderate duty or heavy duty. Heavy duty compressors should be selected for all process duty requirements.

The compressors are further classified as either cylinder lubricated or cylinder non-lubricated. Non-lubricated cylinders can have dry running piston rings or be of the ring-less labyrinth piston type. Whether to use a compressor with lubricated or non-lubricated cylinders is normally dictated by process requirements and the gas to be compressed. Many chemical processes do not permit the use of lubricants, because even the smallest trace of lubricant may poison a catalyst. Gases such as oxygen and chlorine cannot support contact with lubricating oil.

Common cylinder arrangements are vertical in-line, horizontal balanced-opposed, V-arrangement. L-arrangement, W-arrangement or integral with internal combustion engine. A few of these arrangements are shown as follows:

Figure 23 illustrates a typical air-cooled, vertical, trunk-piston, two-stage moderate duty compressor.

Figure 23

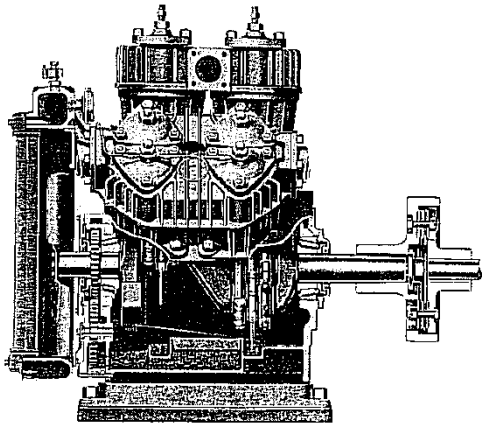

Ingersoll-Rand

Figure 24 shows a horizontal, straight-line, single stage, water-cooled, heavy duty compressor.

Figure 24

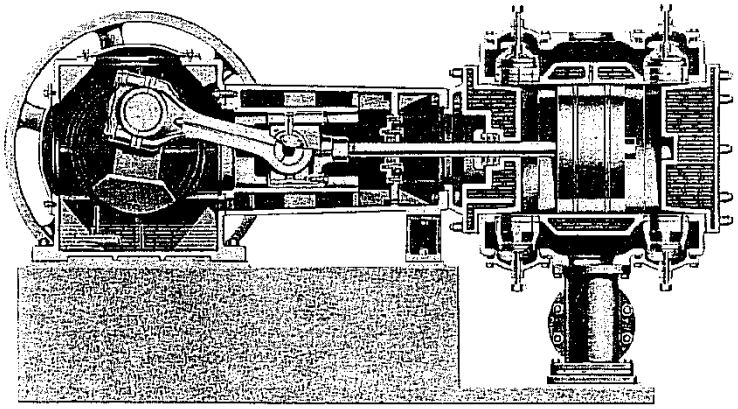

Ingersoll-Rand

Figure 25 indicates a belt driven, vertical, straight-line, water-cooled, heavy duty compressor.

Figure 25

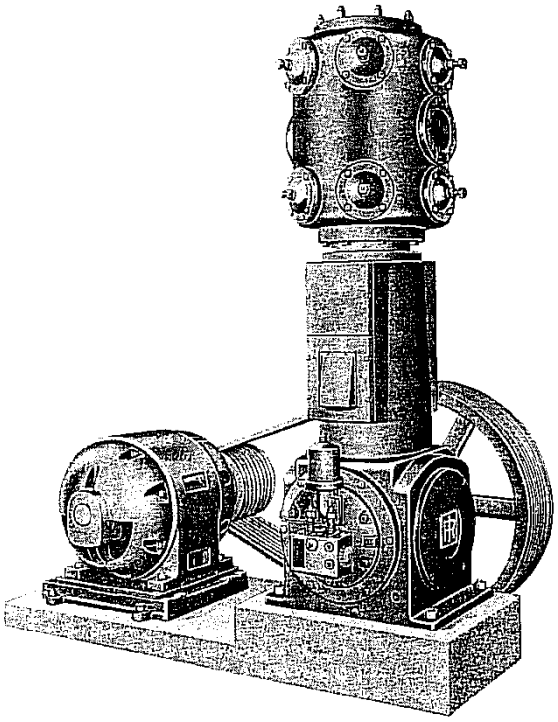

Ingersoll-Rand

A typical angle cylinder arrangement is shown in Figure 26. In some cases, this arrangement has the two cylinders arranged in a "V", each cylinder at a 45° angle from the vertical.

Figure 26

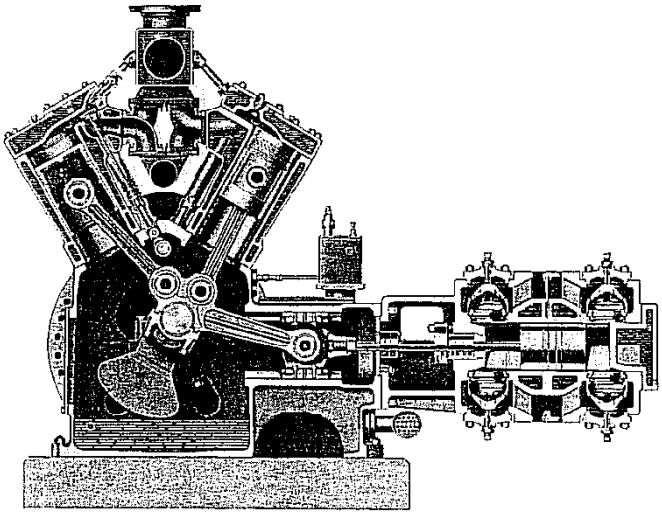

Ingersoll-Rand

A horizontal-opposed design is shown in Figure 27.

Figure 27

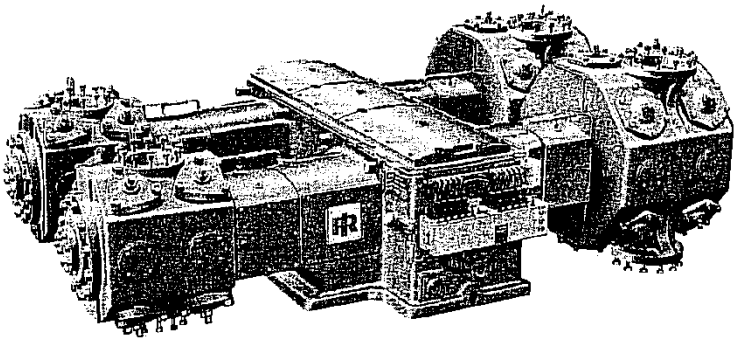

Ingersoll-Rand

The major internal parts of a similar large horizontal-opposed compressor are shown in Figure 28.

Figure 28

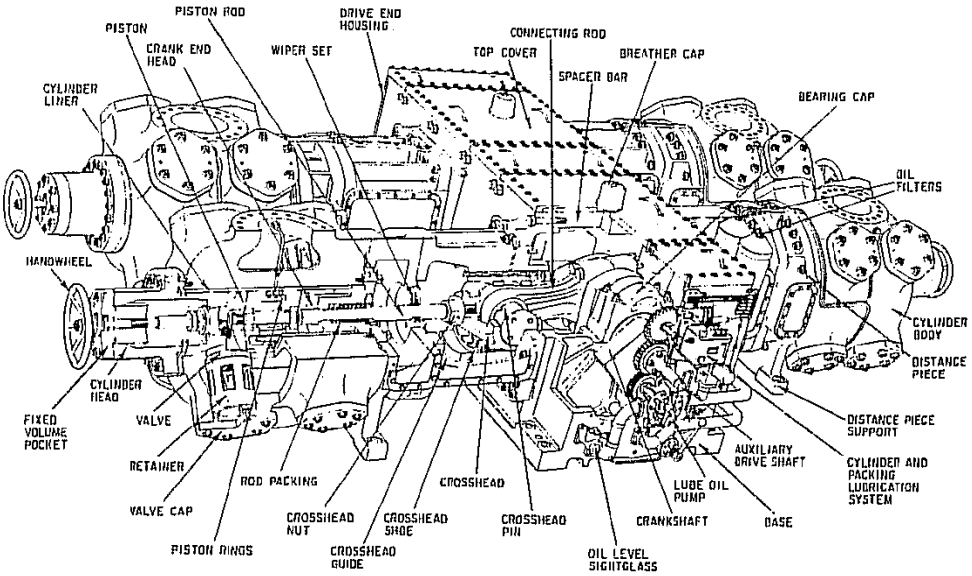

Transamerica De Laval

Compressors can be water-cooled, air-cooled or non-cooled.

5.1.3 Pistons, Rings and Packing

a. <u>Lubricated Compressors</u>

Sealing of the high-pressure compression chamber is a major problem. Currently two solutions are applied: moving seals and stationary seals.

Originally, metallic piston rings were the only sort of moving seals used in the large reciprocating type of compressor for high pressures. They were generally made in three pieces; two sealing rings, each covering the slots of the other, and an expander ring behind both of them, which also sealed the gaps in the radial direction. The materials used were special grade cast iron, bronze, or a combination of both, with cast iron or steel for the expander. The piston, of built-up design, comprised a series of supporting and intermediate rings with a guide ring on top of them and a through-going bolt. All parts of the piston were made of high tensile steel and particular care had to be given to the design and to the stress calculation of the central bolt, which was subjected to severe stress fluctuations.

At present, plungers with packings of the self-adjusting type are most widely used. The packings are usually assembled in pairs, the actual sealing ring tangentially split into three or six pieces being covered by a three-piece radially cut section. Both are usually made of bronze, kept closed by surrounding garter springs, and held in place by locating and supporting steel plates. The sealing

rings are pressed against the plunger by gas pressure, which corresponds to the pressure difference across the sealing elements. The supporting steel plates must also be thermally shrunk to resist the high variations in internal pressure. Unfortunately, the use of sintered hard materials is restricted by the fact that the supporting plates are subjected, in the axial direction, to heavy bending and shearing forces, which these materials generally cannot withstand.

The plungers for medium pressures are made of steel and plated with tungsten carbide. For very high pressures, the use of solid bars of hard metal is the best wear-resistant solution for plungers. The disadvantage of the packed plunger design lies in the much larger joint diameters of the static cylinder parts, which require two to three times higher closing forces than the piston ring design. Large cylinders need a pretensioning of the cylinder bolts to about ten times the maximum plunger load. This ratio is higher for smaller cylinders.

For piston rings and packed plungers, the optimum number of sealing elements appears to be four or five. In both solutions, it is essential that the piston be accurately centered if the seals are to be effective; this is the reason for the guiding ring within or near the cylinder and for the additional guide at the connection between the piston and driving rod. At the base of the cylinder an additional low-pressure gland allows gas leaks to be collected and the plunger to be flushed and cooled.

Other separate glands positioned on the rod connecting the piston to the drive prevent the cylinder lubricant from mixing with the crankcase oil, and as the intermediate space is open to atmosphere, it is impossible for gas to enter the working parts.

From the point of view of design and maintenance, piston rings would appear to be the most adequate solution, and they are currently used for pressures up to 2000 bar or in some circumstances up to 3000 bar. The choice between them and the packed plungers depends largely on the process and type of lubricant used. One difficulty is that normal mineral oils are dissolved by ethylene under high pressure to such an extent that they no longer have any lubricating power. The glycerine used in earlier machines has been widely replaced by paraffin oil, either pure or with wax additives, which is much less diluted by the gas than other mineral oils. However, it is a rather poor lubricant and is inferior to the various types of new synthetic lubricants, which are generally based on hydrocarbons.

In some processes the gas to be compressed must not be contaminated by a toxic lubricant. At present, synthetic oils without toxic ingredients are used almost exclusively.

The basic difference between piston rings and plunger packings is that the latter may be lubricated by direct injection, while piston rings are lubricated indirectly. In general, for higher delivery pressures (above 2000 to 2500 bar), better results are obtained with the use of packed plungers.

b. Non-Lubricated Compressors

In contrast to lubricated compressors, machines with dry-running piston rings and piston-rod-packing rings utilize no liquid lubricant neither of a petroleum synthetic, or other type, nor substitutes (for example, water) within the compression chamber. They belong to the group of nonlubricated compressors.

Basically, there are two different types of nonlubricated reciprocating compressors:

- dry-running compressors with piston rings and rod packing rings, which do not require lubrication.
- frictionless, ringless labyrinth-piston-type compressors.

Since the first appearance of nonlubricated compressors, which had carbon piston rings, these machines have become popular. There are many reasons why nonlubricated compressors are used. The most important ones are mentioned below.

- Some gases do not permit the use of lubricating oils for safety reasons; oxygen is a typical example.
- Some gases attack lubricating oil, for example, chlorine.
- Lubricant contaminates gas stream (for example, instrument air, gases used in the foodstuff industry, and air and carbon dioxide in breweries).
- Lubricant carry-over fouls heat exchangers. This is an important factor in cryogenic cycles.
- No suitable lubricant is available for very low and very high temperatures (for example, boil-off compressors for liquid natural gas storage, steam compressors).
- Lubricant carry-over “poisons” catalyst.

Except for plant air, where the presence of trace amounts of oil may be welcome, there are no compression duties where contamination of the gas by lubricating oil is desired. However, when using nonlubricated compressors, the gas contains no oil to coat piping, pressure vessels, and heat exchangers. If these components are made of carbon steel, corrosion may occur,

Carbon used for piston rings and packing rings has been largely superseded in current practice by composition PTFE material, a fluorocarbon resin or plastic together with filler materials, such as glass fibers, bronze, and carbon. PTFE is not a self-lubricated

material, The value of this material rests solely in its low coefficient of friction. Although only PTFE is mentioned here, the same comments would apply to future plastics, where improvements seem most likely. The plastics industry has developed low-friction materials for almost every gas. However, currently there is no universal material or compound that gives optimum service under all conditions. Although new engineering plastics, which can withstand relatively high stresses and temperatures, have been developed, there are limits to be observed when using non-metallic materials.

These limits are set by the following main factors, which may adversely influence the durability of PTFE piston rings:

- pressure
- temperature
- properties of the gas
- dirt

Compressors with piston rings and piston-rod-packing rings of plastic can normally be used for discharge pressures up to some 20,000 kPa. This, however, is not a fixed limit. With dry gases, excessive wear already occurs at much lower pressures. Although some compressor manufacturers have built dry-running compressors for pressures as high as 27,500 kPa, these compressors require a high incidence of maintenance.

A large number of nonlubricated compressors with a static suction pressure of around 35,000 kPa and a delivery pressure roughly 2800 to 4000 kPa higher than the suction pressure – so-called recirculators - have been successfully built. In these compressors, however, carbon rings have been used because PTFE did not withstand the high temperature created by friction heat. With carbon, an average life of 7000 operating hours has been reached. In the meantime, plastic materials have been developed for higher temperatures; however, it seems that these reciprocating recirculators have been phased out by the Chemical Processing Industry.

Discharge temperature for dry-running compressors with PTFE piston rings should be held to a maximum of 175°C in order to achieve acceptable durability of the piston rings. By properly staging a compressor, the temperature can be kept below the critical limit.

Other problems can arise from the gas itself. A bone-dry gas, such as nitrogen from a cryogenic air separation plant or boil-off gas from a liquid gas storage vessel, can cause severe ring wear. When compressing argon, a bone-dry inert gas with a specific heat ratio of 1.67, the wear problem is aggravated by the relatively high

discharge temperature. For dry-running pistons, dirt is usually the most severe problem.

The design of nonlubricated compressors is basically the same as for compressors with cylinder lubrication except for the high-pressure lubricators for cylinders and rod packings, which are not required.

In nonlubricated compressors, the compression chamber must receive no lubricant from any source; not even from the piston rod that normally traverses both crank-case and rod packing. There is a tendency for oil to creep along the piston rod despite the provision of scraper rings and the high pressure in the cylinder. The only way to properly combat this slight oil contamination is to incorporate an extra length distance piece between cylinder and crankcase, longer than the piston stroke, so that the oil-wetted portion of the piston rod does not travel into the rod packing. In addition to this provision, a slinger has to be installed on the portion of the piston rod that passes into neither the cylinder packing nor the frame packing. Difficult conditions – compression of highly explosive, toxic, or extremely flammable gases - require the provision of a two-compartment distance piece with vent and purge connections.

Reciprocating compressors with dry-running piston rings and gland-packing rings can be built for power inputs up to several thousands kilowatts.

c. Labyrinth-Piston Compressors

In contrast to dry-running compressors of conventional design, as described earlier, the distinctive feature of the labyrinth-piston compressor is that no friction occurs in its gas-swept parts. Instead of piston rings, the labyrinth-piston compressor is provided with a large number of grooves producing a labyrinth-sealing effect against the cylinder wall, which is grooved as well. The piston moves with sufficient clearance so that no contact occurs between the latter and the cylinder wall. The same labyrinth-seal principle is used to seal the piston rod, so lubrication of the gland is unnecessary.

Labyrinth-piston compressors have certain disadvantages as compared with the oil-free compressors with dry-running sealing elements.

The disadvantages of a labyrinth-piston compressor as compared with a machine with piston rings stem from the labyrinth principle itself. High discharge pressures lead to small pistons in the final compression stage, with a corresponding unfavorable ratio of the ring gap surface area between piston and cylinder-to-piston area.

Where light gases, such as hydrogen and helium, are being compressed, this ratio imposes a limit on the application of the labyrinth-piston compressor at significantly lower pressures than mentioned earlier. Whereas energy losses in the labyrinth can be negligible for the majority of gases, such losses can be considerable when light gases are being compressed, particularly to higher pressures. However, this does not entirely exclude labyrinth-piston compressors from hydrogen and helium service. A substantial number of these machines have been installed in cryogenic cycles with helium as a refrigerant.

Labyrinth-piston compressors are available as standardized and custom-designed units. More than 30 frame sizes cover a power range from 20 to 2,000 kW.

Labyrinth-piston compressors generally have a shorter piston stroke and are designed for higher speeds than compressors with piston rings. The reason why compressors with friction on the reciprocating parts have longer strokes and lower rotational speeds is obvious: the more strokes per minute, the more wear occurs at the points where the reciprocating parts change direction. On the other hand, a high rotational speed has a favorable effect on the labyrinth leakage in compressors with labyrinth pistons.

The labyrinth sealing system has its price: labyrinth losses. Labyrinth-piston compressors require more power than non-lubricated compressors with piston rings.

5.1.4 Pulsation damper

Noise and vibration and the problems they can cause to both the compressor and the associated piping have already been discussed in Section 4.1.3. It is apparent that sonic type of pulsation dampening should be considered on both the suction and discharge sides of every reciprocating compressor installation. A full acoustical and mechanical analysis should be accomplished for any significant reciprocating compressor system. It is recommended that the compressor and the associated piping system be computer modeled with the pulsation levels throughout the piping being computed for the worst-case compressor operating conditions. Pulsation dampeners should be selected to attenuate the pressure pulsations anticipated. In designing the pulsation dampeners, consideration should be given to the amplitude(s) of the generated pulsations, the required attenuation, total pressure drop and the effects on the piping system. Engineered pulsation dampeners, that consist of specifically arranged volumes and tubes are preferred to pulsation bottles that contain bladders. They can be furnished in a variety of materials and thicknesses to withstand any temperature, pressure or type of gas. They have no moving parts and are virtually maintenance free.

5.1.5 Compressing Difficult Gases

Difficult gases are those that require special attention by the compressor designer due to their specific properties. Very often standard compressors cannot be used for these services and the selection of the proper compressor type must be made very carefully in order to avoid misapplication and other costly consequences.

The following – incomplete – list demonstrates for which phenomena the compressor designer must be prepared when difficult gases are to be compressed.

These gases may:

- assume the liquid state in intercoolers
- decompose at high temperature
- polymerize
- dimerize
- produce the chemical reaction for which they are used already in the compressor cylinder
- form explosive acetylides in the presence of materials of construction promoting such a reaction
- attack the materials of construction
- cause hydrogen embrittlement
- dissolve materials used for gaskets
- dilute the lubricating oil and cause oil foam
- form an explosive and self-igniting mixture with air
- cause a fire (oxygen)

The compressor designer is normally confronted with two or even more of the above phenomena requiring precautions that very often contradict each other. This may explain why difficult gases are also referred to as nasty or unpleasant gases.

The answer to all these problems is a purpose-oriented design that is based on previous and occasionally costly experience. While with some gases the problem can be solved by selecting a suitable lubricant, other gases prohibit the use of any lubricant at all and oil-free compressors have to be used.

Typical unpleasant gases include the following:

- acetylene (see previous paragraph)
- chlorine
- hydrogen sulfide
- sour gas (i.e., wet gases containing hydrogen sulfide)
- hydrogen chloride
- sulfur dioxide
- carbon monoxide

While these gases are normally inert to metals and do not attack the commonly used structural metals under normal conditions of use, they will corrode most normal materials of construction in the presence of moisture. Corrosion is accelerated at higher temperatures and pressures. Even if the gas is absolutely dry, corrosion may occur if atmospheric air is not prevented from entering the compressor. This means that the whole system has to be inerted carefully before and after overhaul services.

Normally, special materials have to be used for the gas-wetted parts of machines compressing difficult gases, and special precautions have to be taken in order to avoid leakage and to keep the gas temperature below the critical limit fixed in codes and standards for handling corrosive gases.

For chlorine, which is normally compressed to 1000 to 1200 kPa in order to liquefy it, special compressors are available. Since this gas forms hydrochloric acid with oil and water, oil lubrication of the cylinders is out of the question. Compressors with sulfuric acid lubrication used earlier have now been replaced by dry-running machines with piston rings and rod-packing glands of carbon or plastic. Clean and dry chlorine has lubricating qualities, and the wear on the piston rings is astonishing small. It is, however, essential that the chlorine be pure to prevent sealing rings sticking, and it is highly recommended to wash the chlorine gas with liquid chlorine from the liquefier before suction. Care must also be taken to prevent atmospheric moisture from entering the compressor in order to keep the gas dry and to prevent corrosion. The distance piece of these compressors has to be vented by means of dry air or preferably by dry nitrogen under a pressure slightly above atmospheric. The free length of the rod in the venting chamber is greater than the piston stroke, so that traces of moisture adhering to the rod can never come in contact with chlorine. In order to keep the delivery temperature below approximately 82°C, chlorine compressors are usually made in three-stage designs for liquefaction at 1200 kPa.

5.2 Centrifugal Compressors

American Petroleum Institute (API) Standard 617 defines the minimum requirements for Axial and Centrifugal Compressors and Expander-Compressors for Petroleum, Chemical and Gas Industry Services

American Petroleum Institute (API) Standard 672 defines the minimum requirements for Packaged, Integrally Geared Centrifugal Air Compressors for Petroleum, Chemical and Gas Industry Services

5.2.1 Arrangement

The wide rinse of processes in which centrifugal compressors are employed creates many different demands on these machines. The

design utilized for each compressor depends on a number of factors including: pressure ratio, volume flow, number of stages and interstage coolers, injection and extraction of the gas, the type of shaft sealing etc.

General types of centrifugal compressors can be classified in different ways. One common way is a classification by the number of impellers and the type of casing design. The following Table shows a classification of centrifugal compressors that also indicates approximate maximum pressure capacity and power limits.

Table 2

Casing Type	Approximate Maximum Ratings		
	Pressure kPag	Capacity Inlet m^3/h	BHP
A. Sectionalized			
Usually multistage	70*	34,000*	600*
B. Horizontally split			
Single Stage			
(double suction)	105*	1,000,000*	10,000*
Multistage	7,000	340,000*	35,000
C. Vertically split			
Single stage			
(single suction)			
Overhung	210*	425,000*	10,000*
Pipeline	8,300	42,500	20,000
Multistage	Over 38,000	34,000	15,000

* Based on air at atmospheric intake conditions.

It would be impractical to discuss all of the types and configurations available in the centrifugal compressor category. Several different and typical machines are described in the following paragraphs.

Sectionalized compressors are similar to segmental ring centrifugal pumps and blowers. They are low pressure, low flow machines and are used extensively for supplying combustion air for furnaces, ovens and similar applications. They are also used in fluid bed operations. A typical compressor is shown in Figure 29.

Figure 29
Multistage Sectionalized Compressor with Coupled Motor

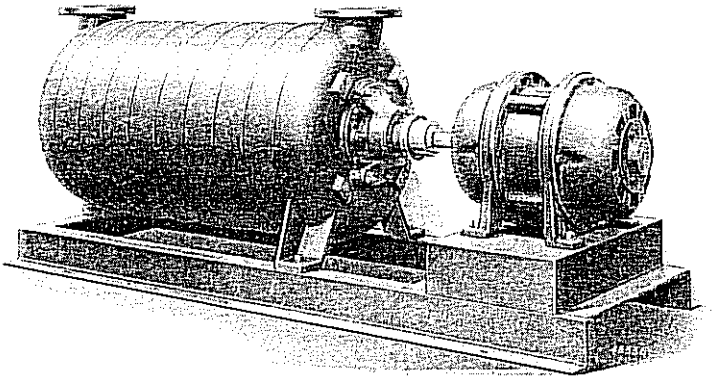

Horizontally split cased compressors can be single or multi-stage machines. As seen in Table 2, single stage machines are low pressure machines that can be used to compress high inlet flow rates. Multi-stage horizontal machines are the largest of the centrifugal compressors and can generate pressures in the neighborhood of 7000 kPa. A multi-stage compressor is shown in Figure 30.

Figure 30

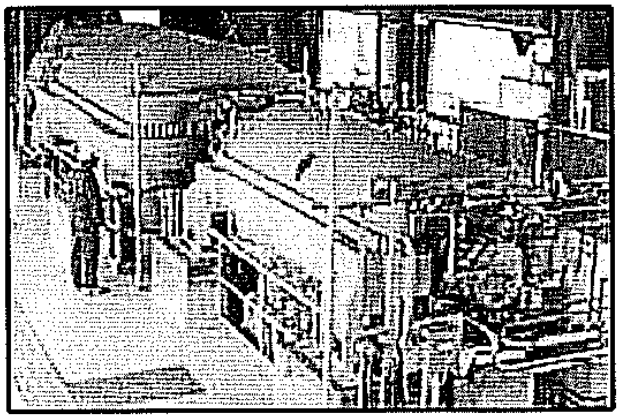

This compressor is the preferred arrangement in many facilities because with bottom suction and discharge, the top cover can be easily removed for inspection and repair. The piping system does not require dismantling.

Vertically split (barrel type) compressors are the preferred, and sometimes the only solution, for high pressures or for compressing gasses rich in hydrogen. These compressors are commonly used in hydrogenation cracking: synthesis of ammonia, methanol and urea: and in the transportation of gas in pipelines.

The cylindrical casing ensures good stress distribution and extremely good tightness. Unlike the casing, the stationary internal components of

the compressor, with the exception of the seal components, are horizontally split. An example of a barrel type compressor is shown in Figure 31.

Figure 31
Barrel-type Compressor Casing and Internals

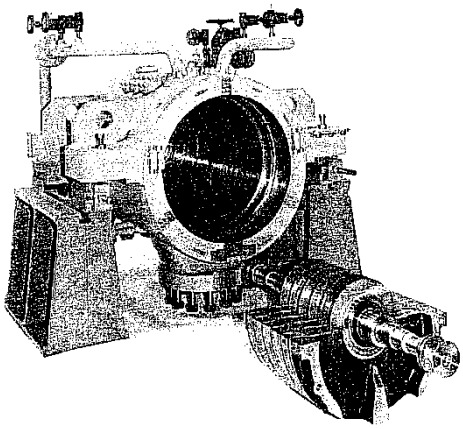

Mannesmann Demag

A single stage over-hung compressor shown in Figure 32.

Figure 32

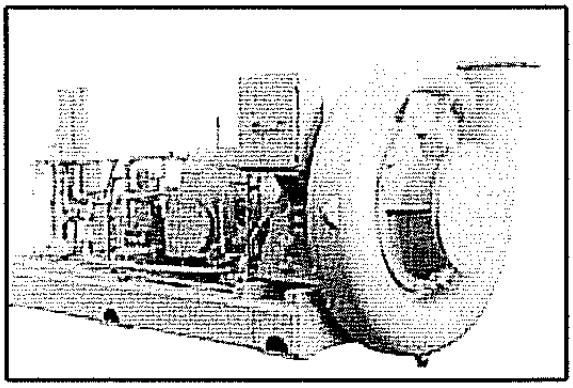

Integrally geared compressors are high speed compressors that were developed in the 1950's to satisfy the requirement for low flow with high head applications. Integral compressors can be used with any type of gas that a process design might involve. By adding stages in series or in parallel, the performance can be increased in head or flow. This can be done by separate compressor units or integrally within the same compressor frame. High speed compressors are manufactured with either vertical or horizontal in-line or horizontal axial inlet with top or side discharge. A cut-away view of a high speed integrally geared, vertical in-line compressor is shown in Figure 35.

Q15

Integrally geared compressors are used in several petrochemical applications for low flow and high pressure, or high flow and low pressure applications. This type of compressor features a bull gear and

from one to four high speed pinions with one or two impellers mounted on each pinion shaft. Refer to Figures 33 and 34. Because the motor is connected to a bull gear, the geared compressor can run at very high rpms leading to very high power efficiencies. In addition, with interstage cooling and the ability to operate each impeller at its own optimum speed (separate from others), higher compression efficiencies are achieved for each compression stage.

Integrally geared compressors are typically designed to be mounted on a single base together with all of the required auxiliaries (e.g. oil pumps, oil reservoir, control instruments) and delivered fully assembled and tested. Typical drive arrangements include direct connection to an electric motor or a turbine (steam or gas). The most common seals used are labyrinth seals especially for non-toxic gases such as air. If the application requires that no gases be discharged to the atmosphere, dry gas seals may be employed. With a rugged mechanical design, integrally geared compressors offer very high reliability and ease of maintenance.

Specifically used in air service, integrally geared compressors can handle typical inlet air flows from 900 to 350,000 m^3/hr with maximum pressures of up to 7000 kPa.

Figure 33
Typical Integrally Geared 4 Stage Compressor Schematic

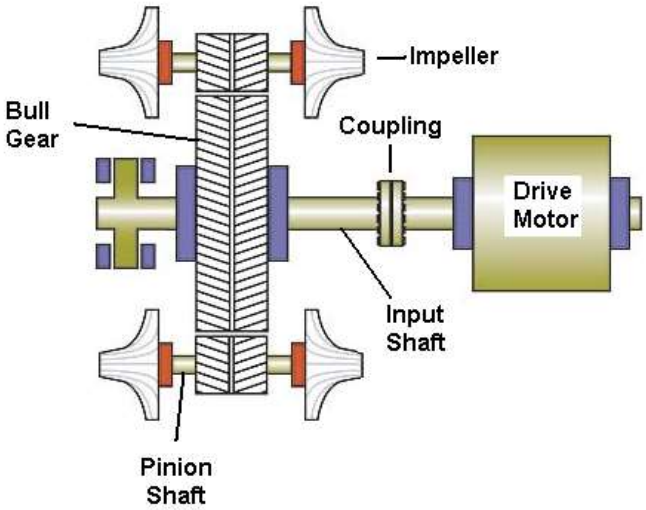

Figure 34
Typical Pinion with attached Impellers

Figure 35

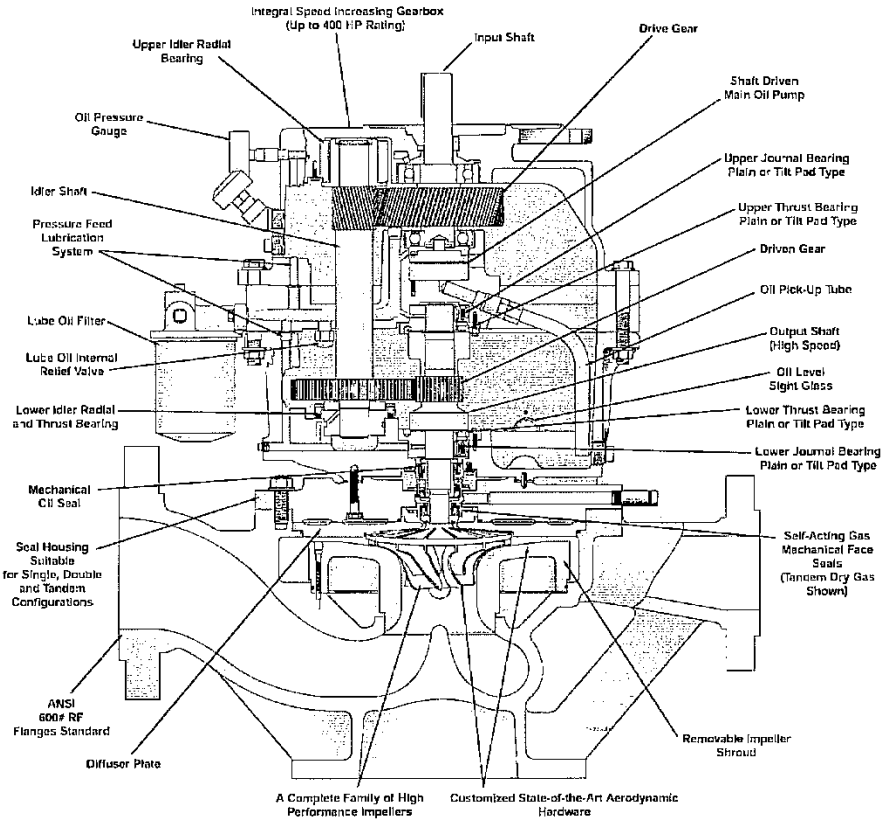

5.2.2 Seals

Seals commonly used in centrifugal compressors include: labyrinth seals, carbon ring seals, non-contacting gas seals (dry-running gas seals or gas-lubricated seals), along with single and double mechanical seals. This section will address certain types of seals and upgrades that can be used to improve the operation and reliability of existing compressors, as well as to aid in the specification of seals for new machines.

a. Floating Ring Oil Seals

Today's floating ring oil seals include several features that make them superior to older seal designs in terms of performance, maintainability and reliability. First and foremost is the windback feature of the inner seal ring. The windback feature improves the performance of the most critical sealing surface in the floating ring seal - the seal between the inside diameter of the inner seal ring and the shaft. The windback consists of a groove machined into the inside diameter of the inner seal ring which creates a small counter-pressure when rotating, pumping the seal oil outboard toward the bearing, thus reducing sour seal oil leakage and oil migration into the compressor. Typical sour oil leakage rates are around 35 liters per day per seal.

Older floating ring seals use o-rings on the sealing surface between the seal rings and the seal housing and also to load the inner and outer seal rings in the axial position. Today's floating ring oil seals employ a high velocity oxygen fuel (HVOF) thermal spray hard surface coating on the mating surfaces of the seal rings instead of an o-ring. Further, the o-ring used to load the inner and outer seal rings in the axial position has been replaced with a spring. Replacement of these o-rings eliminates the risk of seal ring "hang up" caused by sticking o-rings; eliminates the risk of o-ring degradation; and reduces the wear rate of the ring and housing mating surfaces. The result is an improvement in the ability of the seal rings to remain concentric with the shaft and a longer life of the seal components, further reducing sour oil leakage.

In recent years, reduction of gas emissions from compressor seals has become a major effort for many compressor operators striving to become compliant with environmental regulations. Because the seal oil comes in contact with the process gas on the inboard side, gas becomes entrained in the oil. This sour oil is usually drained from the seal to a trap system, where the process gas is vented, usually to the plant flare system. Since the sour oil leakage is greatly reduced with a windback seal, the load on the trap package is reduced accordingly. This allows the trap vents to be isolated from the flare system, eliminating gas emissions. To further assure zero gas emissions from the compressor during normal operation, a nitrogen buffer injection can be added to the labyrinth seal inboard of the inner seal ring.

Finally, current floating ring seals are of a cartridge design, which means they can be fully assembled in a controlled environment and installed into the compressor as a single assembly. The cartridge design therefore reduces maintenance costs and compressor turnaround time.

b. Dry Gas Seals

A popular alternative to upgrading existing oil compressor seals is to replace them with dry gas seals. In addition to replacing the actual compressor seals, a dry gas seal upgrade also requires decommissioning and removal of the existing oil seal system, and installation of a new dry gas seal support system.

Dry gas seals represent the state-of-the-art in compressor shaft sealing technology. Nearly all process gas compressors manufactured today are equipped with dry gas seals. Dry gas seals are mechanical face seals, consisting of a mating (rotating) ring and a primary (stationary) ring. During operation, grooves in the mating ring generate a fluid-dynamic force causing the primary ring to separate from the mating ring creating a very narrow running gap between the two rings. Inboard of the dry gas seal is a labyrinth seal, which separates the process gas from the gas seal. A sealing gas is injected between the inner labyrinth seal and the gas seal, providing the working fluid for the running gap and the seal between the atmosphere or flare system and the compressor internal process gas. Dry gas seals are available in a variety of configurations, but the tandem gas seal is typically applied in process gas service.

Dry gas seals offer many advantages over oil seals. The elimination of seal oil and the oil seal system results in reduced oil usage; elimination of the need to dispose of sour oil; reduced maintenance of the oil system; and improved safety (due to the elimination of flash point issues which occur when gas is absorbed into seal oil). Other advantages include the reduction of process gas losses due to seal emissions; reduced operating costs (parasitic power losses are much lower with gas seals); and improved seal reliability.

c. Damper Seals

Rotordynamic instability in centrifugal compressors manifests itself in the form of subsynchronous rotor vibration, typically in high pressure applications. Such vibration can easily lead to damage of compressor internal parts, or at the very least, accelerated wear. Existing balance piston and/or division wail labyrinth or honeycomb seals can be replaced with a hole pattern damper seal when increased rotor damping is required to improve rotor stability. The hole pattern damper seal offers rotordynamic benefits equivalent to or better than conventional honeycomb seals without the performance penalty.

Features and Benefits

Hole pattern damper seals are typically manufactured from the same aluminum material as a labyrinth seal, employ a single piece construction, and can usually be designed as a direct replacement for existing labyrinth or honeycomb seals without further modifications to the compressor.

The hole pattern damper seal offers many advantages over honeycomb and labyrinth seals. The hole pattern damper seal has been proven to effectively increase rotor damping. In fact, full-load, full-pressure factory testing of a back-to-back compressor has proven that the hole pattern damper seal can actually increase the rotor's logarithmic decrement (log dec) as the discharge pressure increases, which is in direct contrast to previous industry experience.

In addition to the rotordynamic benefits, the hole pattern damper seal offers a substantial operating benefit in improved compressor performance. Unlike honeycomb seals, the hole pattern damper seal is manufactured from the same aluminum material as a labyrinth seal. This allows the compressor designer to use the same shaft clearance for a hole pattern damper seal as is used for a labyrinth seal. When compared to the generous clearances required for honeycomb seals, the hole pattern damper seal can reduce internal seal leakage by 50 percent, which equates to a substantial power savings.

Further benefits of the hole pattern damper seal over a honeycomb seal include shorter manufacturing cycle times, improved rub tolerance, and increased structural strength.

d. Polymer Labyrinth Seals

Labyrinth seals are an integral part of any process compressor. A labyrinth is a non-contacting seal that uses a tortuous path to restrict gas leakage. A pressure drop occurs at each labyrinth tooth as the gas is squeezed between the labyrinth tooth and the rotor. A labyrinth's sealing efficiency is directly proportional to its clearance over the rotor. Labyrinths are used as shaft end seals, impeller eye seals, interstage shaft seals, balance piston seals, and division wall seals (in back-to-back compressors). Engineered polymer (thermoplastic) labyrinth seals can replace existing metallic (usually aluminum) labyrinth seals to provide increased wear and corrosion resistance.

Features and Benefits

The primary benefit of polymer labyrinth seals is their Inherent wear resistance. Polymer labyrinths have the ability to deflect and return to their original shape after "touching-off" with the compressor rotor (i.e. elastic deformation). This allows the labyrinth clearance to be maintained after contact with the rotor. In contrast, when an aluminum labyrinth is subjected to a rotor rub, the tips of the labyrinth teeth can be worn as the softer aluminum material makes contact with the harder steel rotor (i.e. plastic deformation). The result is a permanent increase in the labyrinth clearance, which increases gas leakage across the labyrinth and decreases operating efficiency. Additionally, aluminum labyrinths can sometimes gall the compressor rotor, damaging shaft sleeves and further increasing the clearance. Rotor galling is not an issue with polymer labyrinths.

It has been estimated that efficiency gains of 0.5 percent to one percent per impeller can be realized with most polymer labyrinth upgrades. This rule of thumb is often misinterpreted as a dramatic improvement in efficiency. For example, a polymer labyrinth upgrade for a compressor with six impellers is often mistakenly expected to result in an overall efficiency improvement of three percent (six impellers times 0.5 percent efficiency gain per impeller). However, a 0.5 percent efficiency gain for each of the six impellers results in an overall compressor efficiency improvement of 0.5 percent. Given the accuracy and availability of instrumentation in most compressor installations, it is very unlikely that field testing could detect this level of overall efficiency improvement.

These immediate efficiency gains are based on the assumption that installed polymer labyrinth clearances can be designed to be tighter than the existing aluminum labyrinth clearances, due to polymer's ability to deflect during rotor contact. However, in the author's experience, this is not always a valid assumption. In many cases, it is not possible to reduce the installed labyrinth clearance when using polymer materials due to thermal growth issues (discussed later).

While an immediate improvement in operating efficiency may or may not be observed, polymer labyrinths will provide a long-term efficiency gain. As explained previously, as aluminum labyrinths make contact with the rotor, they will wear over time until they reach a point of maximum running clearance and minimum efficiency. The compressor will be operated under these conditions until the next scheduled shutdown, when the aluminum labyrinths can be replaced. In this regard, polymer labyrinths are clearly superior. Polymer labyrinths will wear at a rate much slower than aluminum, and thus will maintain a tighter running clearance and

higher efficiency over a longer period of time. From this standpoint, the use of polymer labyrinths could increase the time between scheduled compressor turnarounds.

A second major benefit of polymer labyrinths is their corrosive resistance in certain operating environments. Certain elements, such as mercury and hydrogen sulfide, are corrosive to aluminum, and can attack and destroy the labyrinth. Polymer labyrinths can offer improved corrosive resistance in these cases, thereby increasing compressor reliability. PEEK (poly-ether-ether-ketone) material, for example, has excellent chemical compatibility characteristics.

e. Seal Gas Condition Systems for Dry Gas Seal Applications

With the increased popularity of dry gas seals a discussion of gas conditioning is appropriate. Contamination is a leading cause of dry gas seal degradation and reduced reliability. Ingress of foreign material (solid or liquid) into the narrow seal running gap between the seal's rotating and stationary rings can cause degradation of seal performance (excessive gas leakage to the vent) and eventual failure of the seal. A primary source of gas seal contamination is the seal gas supply injected into the seal. Contamination from the seal gas supply occurs when the sealing gas is not properly treated upstream of the dry gas seal. Seal gas conditioning systems can be employed to reduce or eliminate contamination from the seal gas supply, thus increasing gas seal reliability / availability.

Seal gas conditioning systems typically include a pre-filter/liquid separator, heater, and/or pressure booster, all mounted on a single baseplate installed upstream of the existing compressor gas seal system (typically mounted on a panel adjacent to the compressor). The system is intended to condition the seal gas before it flows into the compressor gas seal system in order to assure a certain gas quality at the gas seal. In regards to gas seal contamination from the sealing gas, there are three areas of concern: seal gas quality, composition, and pressure. Each of these problem areas can be addressed with a seal gas conditioning system:

Seal gas quality. Gas seal manufacturers have stringent requirements for seal gas quality. Typically, the sealing gas must be dry and filtered of particles 3 micron (absolute) and larger. Coalescing-type filters are normally provided in the gas seal system to address this requirement, but such devices may be inadequate depending on the source of seal gas supply. At a minimum, a pre-filter should be provided as part of the seal gas conditioning system in order to remove solid particles. If entrained liquids are present in the seal gas, a liquid separator should also be provided.

Seal gas composition. "Heavy end" hydrocarbons and water vapor in the sealing gas will have a tendency to condense as the gas flows through the gas seal system. Components of the gas seal system such as filters, valves, orifices, and the seal faces themselves will cause seal gas pressure drops during operation. As the seal gas expands across these components, the Joule-Thomson effect will result in a corresponding decrease in the gas temperature. A gas heater can be provided as part of the seal gas conditioning system in order to superheat the seal gas and reduce the risk of liquid condensation.

Seal gas pressure. The seal gas source must be available at sufficient pressure to cover the entire operating range of the compressor. The author has previously suggested a minimum seal gas source pressure of at least 50 PSI above the sealing pressure. This may not be achievable during some transient conditions. In these cases, a seal gas pressure booster can be provided with the seal gas conditioning system, or an alternate source of seal gas can be employed.

In systems where a dry-gas seal design is preferred, the seal support system should follow the API Standard 614, Lubrication, Shaft Sealing, and Control-Oil Systems and Auxiliaries for Petroleum, Chemical, and Gas Industry Services. Refer to Appendix 5 of this guide for a detailed review of design standards for gas seal support systems as outlined in API 614.

Q16

5.2.3 Capacity and Anti-surge Control

Most centrifugal compressor installations require continuous adjustment of the compressor characteristics for such reason as:

- Varying inlet temperature, inlet pressure and gas composition.
- Compressor must operate in series or in parallel with other compressed gas sources in the system.
- Driver must not be overloaded at start-up or during operation.
- Surge must be avoided.

a. <u>Capacity Control</u>

Capacity control methods available to the systems designer to meet these conditions are: variable speed control; discharge throttling; suction throttling by inlet valve, suction damper or variable inlet guide vanes; and bypass capacity control.

Variable Speed Controls: In centrifugal compressor installations that use a variable speed driver, speed variation is the most effective method of controlling the capacity. The steam turbine lends itself to variable speed duty. A discharge pressure controller or inlet flow controller can be connected to the turbine governor to

manipulate speed to compensate for varying system pressures or flows. Capacity control by speed variation requires minimum part-load horsepower as compared to the other capacity control methods. Figure 36 indicates how variable speed can provide an infinite variety of compressor head-capacity curves over the drivers' speed ranges. Figure 36 resembles Figure 9 except that the polytropic head is eliminated as a variable, because it is too cumbersome to use. The curve in Figure 9 is converted to a curve of discharge pressure versus inlet flow by assuming a constant inlet temperature, constant suction pressure and almost constant compressibility factor, Z.

Figure 36
Centrifugal Compressor Characteristics at Inlet Conditions

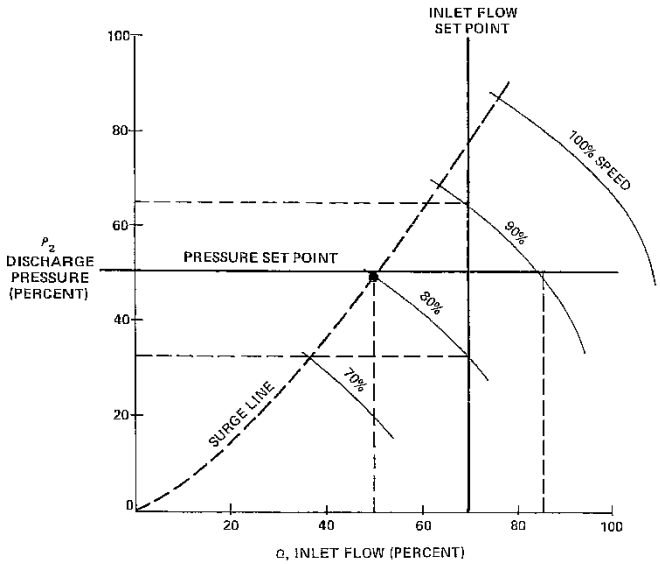

CONTROLLING	SPEED VARIABLE	INLET FLOW Q	DISCHARGE PRESSURE P_2
CONSTANT P_2	80%–90%	50%–82%	50%
CONSTANT Q	80%–90%	70%	30%–62%

Discharge Throttling: Centrifugal compressors driven by electric motors or single-shaft gas turbines, and compressors used in a multiple process service with a single driver, are operated at constant speed. The constant speed driver requires other methods of capacity control.

Discharge throttling is an infrequently used method of effecting capacity control at constant speed. This method will cause the compressor to follow the head capacity curve as shown in Figure 9. However, because it is inefficient and wastes horsepower, it is not recommended. Discharge throttling should only be considered for low-horsepower fans and blowers, especially those with "squirrel cage" fan wheels or as otherwise called for in the Project Specifications.

Suction Throttling: Suction throttling is a simpler and more efficient method for capacity control at constant speed than discharge throttling. Less pressure has to be throttled on the suction of a compressor to realize the same result as discharge throttling. The significant advantage to suction throttling is the creation of a larger inlet flow volume by reducing the suction pressure. This has the effect of increasing capacity range of the compressor.

The relationship between suction and discharge throttling is illustrated in Figure 37. If point A is the process required head, then point B represents the effect of discharge throttling and point C represents the effect of suction throttling.

Figure 37
Comparison of Suction and Discharge Throttling

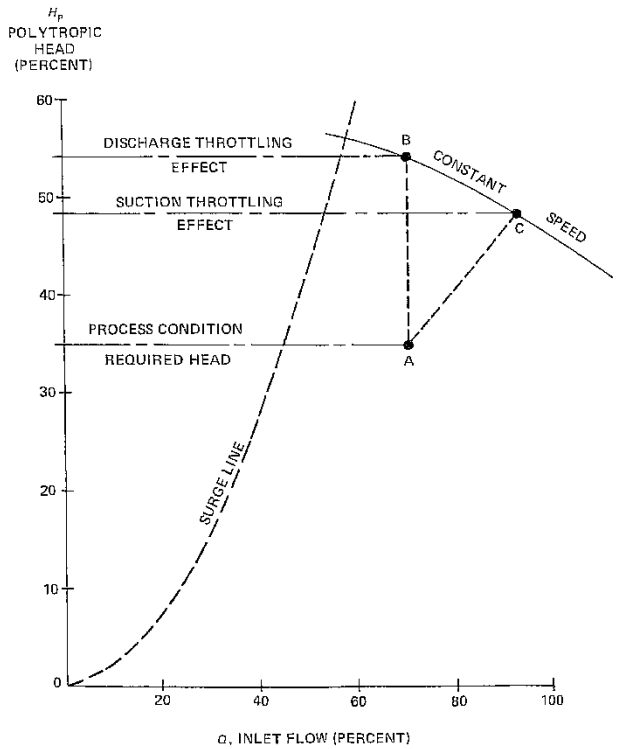

A throttling device on the compressor suction will reduce the compressor suction pressure. This increases the pressure ratio and causes the head required by process conditions to equal the compressor available head. The compressor suction volume is increased as the gas expands when pressure is reduced and the operating point becomes C.

Throttling the discharge will increase the discharge pressure and increase the pressure ratio and the required head. The operating point for discharge throttling becomes point B. This behavior is similar to discharge throttling of a centrifugal pump.

Suction throttling is achieved by providing a butterfly valve or suction damper in the compressor inlet piping. An air motor for remote or automatic operation of the valve should be included as well as a handwheel for local manual control.

Similar to suction throttling, but with significant improvements, is inlet guide vane control. Although the use of inlet guide vanes is a highly efficient method of achieving capacity control at constant speed, they are an expensive item. Therefore, they should be considered only for those applications where resultant power savings in the driver are significant and when the compressor is expected to operate at partial loads for long periods of time. Usually, their use is limited to axial-type compressors.

Bypass Capacity Control: The three methods of capacity control previously discussed can be used for varying compressor capacity; however, in each method a minimum flow condition will be reached which may cause surging of the compressor. To prevent the compressor from entering surge, an operator or a control system must maintain the compressor inlet flow high enough to avoid the surge limit line shown in Figures 9 and 36. Whenever the process calls for less flow, the difference between demand flow and minimum stable compressor flow shall be recirculated around the compressor through a bypass valve installed between the discharge and suction lines. This method of avoiding surge condition in a centrifugal compressor is called bypass control.

Two important considerations to take into account when a bypass system is to be installed are:

- Recycled gas shall be cooled by a process cooler, a suction cooler, a special bypass cooler or by liquid injection into the bypass stream before it is returned to the compressor inlet. The method of cooling selected shall not affect the gas characteristics.

- If no special check valve (one that lifts on very low pressures) is provided, the bypass line should take off between the compressor-discharge and the discharge check valve. This measure allows the compressor to operate safely even with a discharge pressure that is insufficient to lift the check valve.

Bypass capacity control provides flexibility for systems with unusual operating conditions. It may be used with centrifugal compressor installations just as it is used for reciprocating installations. It is not recommended for systems that require continued large control increments.

b. Antisurge Control

To design an antisurge control system for a centrifugal compressor, some mathematical relationships describing the compressor characteristics should be established. It is necessary to make a number of simplifying assumptions such that the control system may be easily built with available instruments.

Figure 38
General Antisurge Control System

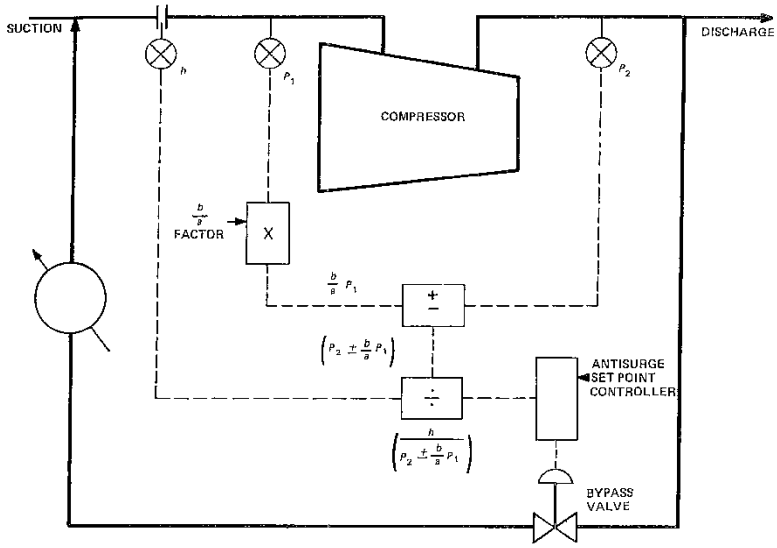

Data necessary to the design of most antisurge control systems are provided in the following equation:

$$h \leqq \frac{a}{K_3\ K_2}\left[P_2 \pm \left(\frac{b}{a}\right) P_1\right]$$

Where:
h = differential pressure.
a and b = constants.
K_3 = orifice coefficient.
K_2 = constant for simple parabolic function.
P_2 = discharge pressure.
P_1 = suction pressure.

In the equation $\frac{a}{K_3\ K_2}$ is the set point of the antisurge controller,

and $\frac{h}{P_2 \pm \left(\frac{b}{a}\right) P_1}$ is computed from measurement of inlet flow,

suction pressure and discharge pressure.

To increase the security of surge protection the set point value should be increased. By increasing the set point value, the limits of control are moved further from the actual surge line. For a diagram of this antisurge control system see Figure 38.

In the past, the antisurge control system could be installed with either pneumatic or electronic computing relays and controllers, but today electronics have advanced to the point that they should be the only consideration.

The operation of the antisurge controller shown in Figure 38 does not hold the measurement at the set point.

During normal operation the value of the set point constant, $\frac{a}{K_3\ K_2}$ is below the value $\frac{h}{P_2 \pm \left(\frac{b}{a}\right) P_1}$ of the ratio.

Only when the compressor inlet flow is near the surge region does the controller need to act; therefore, controller operation must be discontinuous. When a normal two-mode controller (proportional and reset) is used for the antisurge controller, a certain amount of overshoot will occur. If this overshoot crosses the surge set point line, surge occurs. Moving the set point farther from the surge line prevents surging but causes the bypass valve to open before surge is imminent. The result is unnecessary pressure losses and wasted horsepower.

Modifying the conventional two-mode controller can eliminate this problem. When the two-mode controller is used in a discontinuous service, modification is necessary because the reset feature has a tendency to "wind up." With this type of controller, the proportional band is not fixed in relation to the set point. For antisurge control, the proportional band of the controller shall be repositioned so that its upper limit is at the set point. Overshoot is eliminated since the measurement reaches the proportional band before it reaches the set point. The control action, which is activated long before the surge line is reached, allows a closer setting to the actual surge line without losses caused by early opening of the bypass valve.

To accomplish this action, a switch that is energized by the output of the controllers be inserted in the reset circuit, Whenever the output exceeds 100 percent, the switch disables the reset circuit and leaves a proportional controller; often referred to as an "antiwindup" switch. Proportional reset controllers are commercially available with this feature.

In some cases adequate antisurge control can be achieved by use of a simple proportional mode controller. This method is recommended if a controller with the antiwindup feature is unavailable.

Antisurge control, the scheme which is generally used, provides antisurge protection for a centrifugal compressor system where both speed and suction pressure may vary. The constant factor, b/a, in the previous equation allows adjustments to the control system to follow the actual shape of the surge line as closely as possible. Variations in the specific heat ratio or gas molecular weight may have an effect. If variations in the specific heat of gases are considerable, the control system should be set for the highest value of n in the following equation:

$$a = \left(\frac{P_2}{P_1}\right)^{\frac{-1}{n}} \quad \text{and} \quad b = \frac{1}{n-1}\left(\frac{P_2^{\frac{n-1}{n}}}{P_1} - n\right)$$

Where:
P_2 and P_1 = average working condition of the compressor.

A clarification of the surge control scheme can be made by simplifying the original equation as follows:

$$P_2 - P_1 = K_4 h$$

In this equation, there is no term to allow for closely characterizing the surge line. To determine the constant, K_4, a linear set point line is established to the right of the surge line and passes through the origin. The slope of the set point line should be far enough to the right of the actual surge limit line to provide an added degree of safety. The slope of this setpoint line is the value of K_4. Figure 39 shows the control system using this equation.

Figure 39
Simplified Antisurge Control System

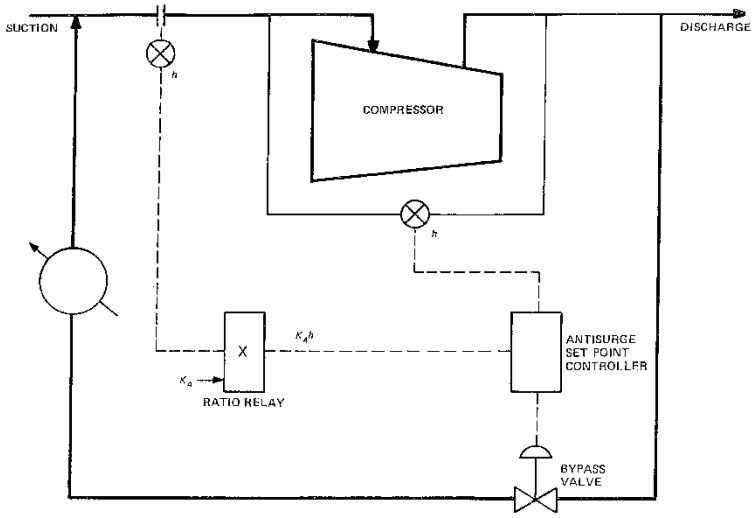

The variable P2 – P1 is measured by a differential pressure transmitter, thus simplifying the instrument configuration of the control system. The simplicity and applicability over a wide range of operating conditions make this surge control system ideal for most variable speed compressor installations.

Each of these surge control systems depends on inlet flow measurement. Inlet volume can be measured with an orifice or flow element on the discharge side, if mass flow is measured at the discharge. The discharge mass flow can be converted to volume flow at the inlet pressure and temperature. This approach may be useful if a smaller flow element can be used in the discharge or if pressure loss is not objectionable in the discharge. To obtain discharge mass flow, either a densitometer has to compensate discharge volume flow or the flow must be corrected by measuring discharge pressure and temperature. These antisurge control systems may be used on a centrifugal or axial compressor with constant or varying speed.

5.3 Rotary Screw Compressors

American Petroleum Institute (API) Standard 619 defines the minimum requirements for Rotary-Type Positive Displacement Compressors for Petroleum, Chemical and Gas Industry Services.

Q17

5.3.1 Arrangement

A rotary screw compressor consists of two meshing helical screws. One screw has a male profile the other has a female profile. There are no valves as with piston compressors, which creates a more simpler, quieter-running compressor.

Air or gas enters one end of the compressor and gets trapped between the two meshing screws. As the screws rotate together, the gap

between them decreases which compresses the gas that is still trapped between them. At the opposite end of the compressor is the discharge where gas is released from between the screws at a significantly higher pressure than it originally entered. (See Figure 40.)

Figure 40
Compression Process in Rotary Screw Compressors

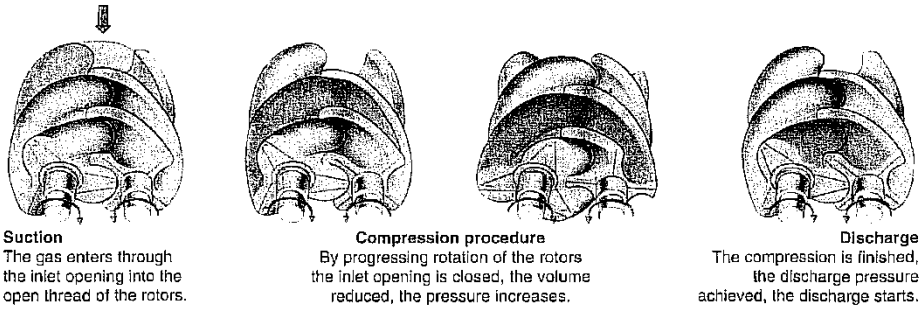

Two-stage compressors have two sets of screws – a low pressure set and a high-pressure set. Compressed gas/air that is discharged from the "low-pressure" screws passes through an intercooler before being compressed by the second set of "high pressure" screws. A two-stage rotary screw compressor can operate at efficiency levels up to 15% higher than a single stage unit. The reduced pressure differential in a two stage unit significantly reduces blow-by and thrust bearing loads.

Rotary screw compressors, like reciprocating compressors, are available in lubricated or non-lubricated designs.

Lubricated type rotary screws are internally oil-cooled. Cooling oil is injected into the air stream to absorb the heat generated by the compression of the air. The hot oil is taken away and cooled in a heat exchanger. Because the rotary screw compressor is cooled from within, it keeps the internal components of the compressor from reaching excessive temperatures.

Lubricant-free rotary screw compressors operate without lubricant being introduced into the compression chamber. Typically used in instrument air service and process gas service there are two distinct types of lubricant-free screw compressors: (1) dry-type and (2) water injected type.

In the dry-type rotary screw, the intermeshing rotors are not allowed to touch and are kept separated by lubricated timing gears external to the compression chamber. Since there is no injected fluid to remove the heat of compression, most designs use two stages of compression with an intercooler between the stages and an aftercooler after the second stage. The coolers normally consist of the air-cooled type but water-cooled and air-cooled radiator types may be used as well. Typical machine sizes range from 18 to 3000 kW or 330 to 34000 m3/hr with

discharge pressures to 350 kPa for single stage machines and 1034 kPa for two-stage machines.

In water-injected type rotary screws, a similar timing gear construction is used but water is injected into the compression chamber to act as a seal for the internal clearances and to remove the heat of compression. The injected water, together with the moisture from the atmosphere, is removed from the discharged compressed air by conventional moisture separation devices. Typically limited to single stage configurations, discharge pressures for this type of machine range from 700 to 1000 kPa.

For both types of lubricant-free rotary screws, the dry-type and the water-injected type, lubricant is used in external gear casings for gears and bearings and isolated from the compression chamber. The lubricant may be used for stator jacket cooling in air-cooled units. Typically, a lubricant pump is directly driven from a shaft in the gearbox and assures lubricant flow immediately at start-up and during run-down in the event of power failure. A lubricant filter, typically with a 10 micron rating, protects bearings, gears, and the lubricant pump from damage.

Advantages of lubricant-free rotary screws include: (1) the units are completely packaged, (2) oil-free air is produced, and (3) generally no special foundations are required. Disadvantages include: (1) significant cost premium over oil injected types, (2) lower efficiencies than oil-injected types, and (3) higher maintenance costs than oil injected types.

A process gas compressor is shown in Figure 41.

Figure 41
Single Stage Oil-Free Process Gas Compressor

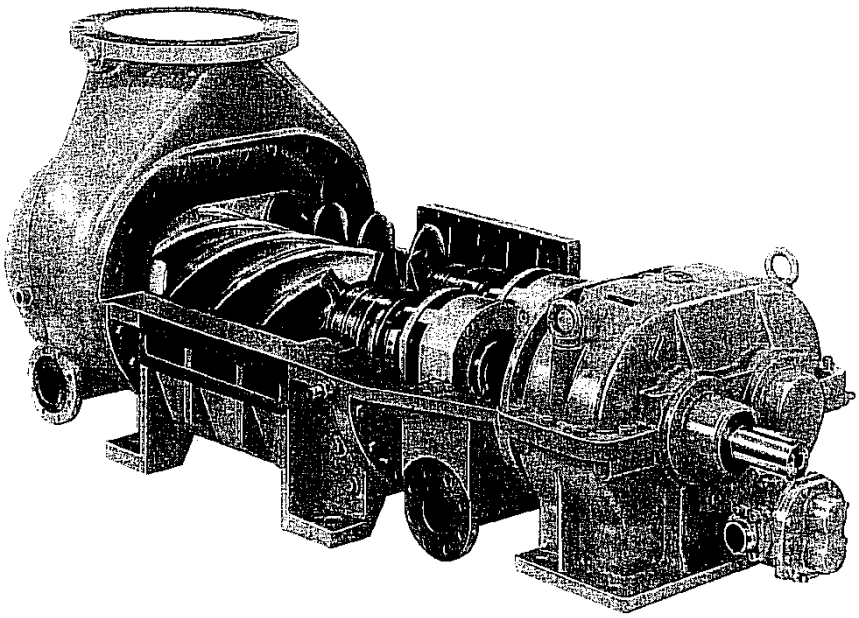

Aerzen

The principal components of a large two-stage compressor are shown in Figure 42.

Figure 42
Two-Stage Rotary Screw Compressor

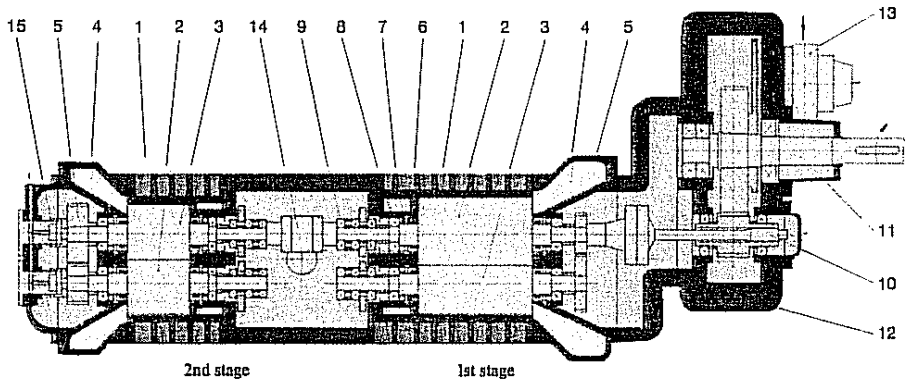

Aerzen

Principal components of a two-stage rotary screw compressor. 1 = Housing; 2 = male rotor; 3 = female rotor; 4 = side plate on intake side; 5 = timing gears; 6 = graphite ring shaft-seal; 7 = oil seal; 8 = radial bearing; 9 = axial thrust bearing; 10 = torsion shaft; 11 = drive shaft; 12 = step-up gears; 13 = oil pump; 14 = coupling; 15 = compensating piston.

Q18

5.3.2 Compression Ratio vs. Volume Ratio

The volume ratio of a rotary screw compressor is defined by the equation below:

$$V_i = \frac{\text{Inlet volume, actual cubic meters}}{\text{Discharge volume, actual cubic meters}}$$

The volume ratio is related to the internal pressure ratio that is developed inside the flute spaces due to volume reduction.

$$P_i = V_i^k$$

A compressor with a fixed volume ratio will develop the same internal pressure ratio, regardless of line pressure. Many compressors that have an axial port only have a fixed volume ratio. Other compressors have changeable volume ratio, by removing a slide valve (that contains a radial discharge port), and replacing it with a slide valve that has a different sized radial port. Others can vary the volume ratio while the compressor is in operation. Volume ratio is changed by changing the size or location of the discharge port. A smaller discharge port will increase the volume ratio by holding the gas inside the flute space

longer than a larger discharge port. The longer the gas is held inside the flute space before it is allowed to communicate with the discharge line, more rotation, volume reduction, and subsequent pressure increase occurs. Figure 43 shows an axial port and different volume ratio radial ports.

Figure 43
Axial and Radial Discharge Ports for Rotary Screw Compressors

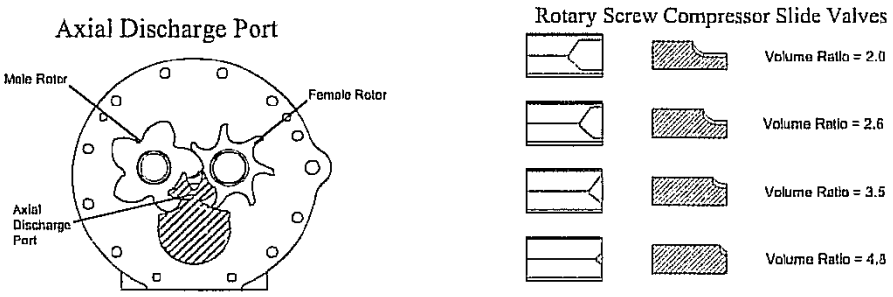

Aeriel Corporation

For best efficiency, the volume ratio should be sized so that the internal compression ratio matches the system compression ratio. If the internal compression ratio does not match the system compression ratio, the result is either overcompression, or undercompression. See Figure 44, an over/under compression P-V card.

Figure 44
Over/Under Compression P-V Card

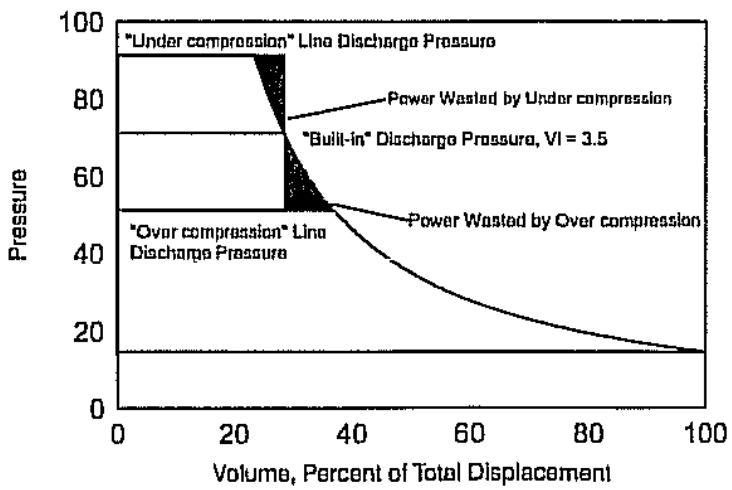

In overcompression, the gas is compressed more than the system requires. Gas is compressed to the internal discharge pressure, and then expands down to suction pressure. Extra work is required to compress the gas to the internal discharge pressure, rather than to the system discharge pressure.

With undercompression, the gas internal discharge pressure is lower than the system discharge pressure. Gas from the discharge line backflows into the flute space, equalizes pressure, and must be compressed again. Extra work is required to compress the same gas twice.

Generally, overcompression is less efficient than undercompression. In overcompression, extra work is done on the entire flow stream, while in undercompression, extra work is done only on the gas that backflows into the flute space from the discharge line.

Q19

5.3.3 Capacity Control

Since a rotary screw compressor is a positive displacement device, the capacity control methods are similar to other positive displacement devices, namely reciprocating compressors. Capacity control methods, in order of decreasing efficiency, are as follows:

- Rotating speed
- Internal bypass
- Suction throttling
- Unit bypass

Of these capacity control methods, the only one that is affected by the internals of the compressor is internal bypass. Internal bypass can be operated with poppett valves, by opening bypass slots in the rotor housing, or by moving a slide valve towards the discharge end of the compressor (Figure 45).

Opening the internal bypass changes the location of the suction port, effectively shortening the length of the rotors. Shortening the effective length of the rotors reduces the capacity, as the sealing point takes place after the rotors begin to mesh and, reduce flute volume. Gas is pushed back into the suction area with rotor meshing until the trailing lobe crosses the sealing point.

As a consequence of reducing inlet volume, the volume ratio is also affected. Even compressors with variable volume ratio lose volume ratio control once capacity reduction occurs. Since the inlet volume and discharge volume are both a function of slide valve position, they cannot be controlled independently. Two devices, one to control inlet volume, and another to control discharge volume would be required to control volume ratio with capacity reduced using internal bypass. Figure 46 shows a characteristic Vi vs. slide valve axial position curve for a slide valve compressor.

Figure 45
Slide Valve Capacity Control

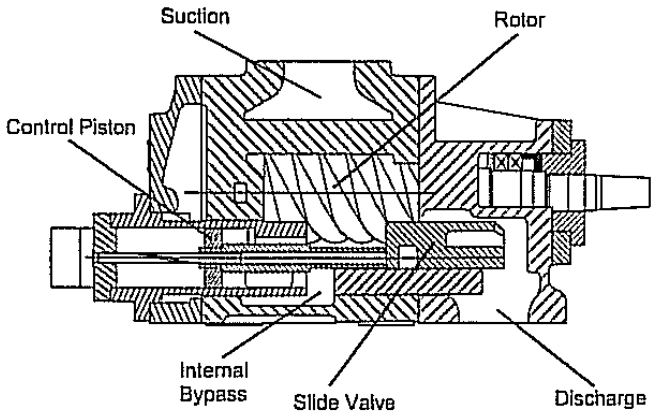

Ariel Corporation

Figure 46
Volume Ratio vs. Slide Valve Axial Position
Part Load Volume Ration

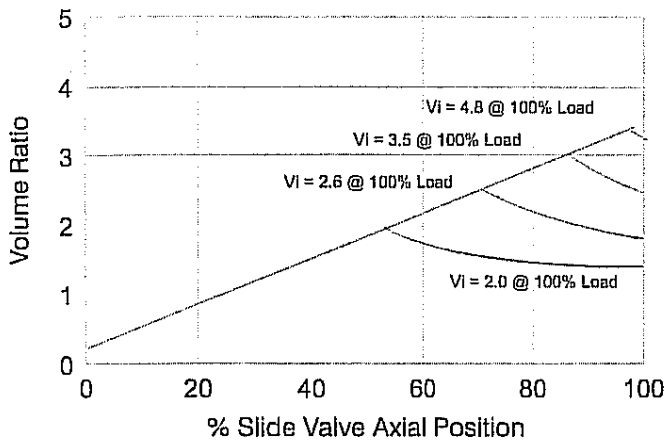

Ariel Corporation

5.3.4 Oil Injection

Oil flooded rotary screw compressors have oil injected directly into the compression chamber, in addition to oil used for lubricating the bearings and mechanical seal. Oil can also be used to actuate hydraulic capacity controls.

Oil lubricates, seals, and absorbs the heat of compression in oil flooded rotary screw compressors. This allows for better efficiency and higher allowable compression ratios compared to oil free rotary screw compressors. However, the oil comes into contact with the process gasses, which can make oil selection an issue, and also gas/oil separation on the discharge of the compressor is required.

A typical oil system schematic is shown as Figure 47.

Figure 47
Oil System Schematic

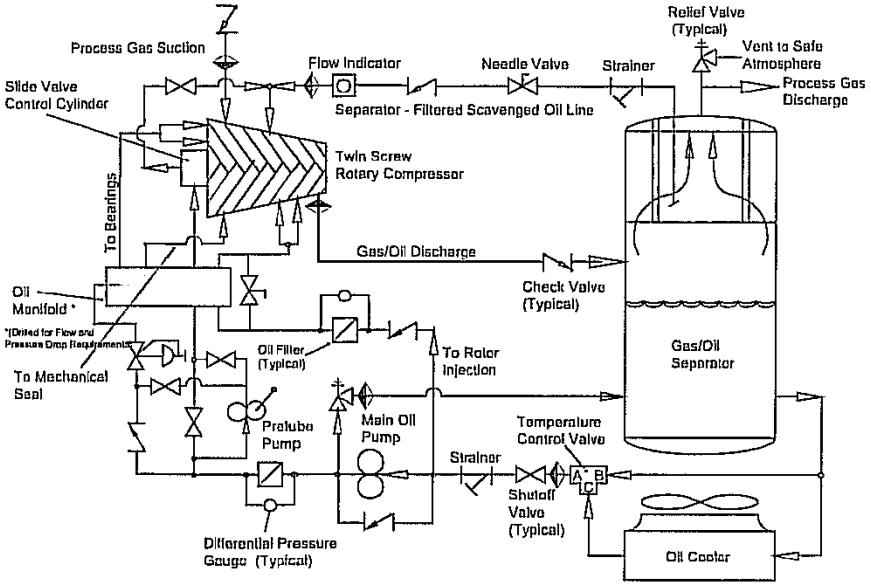

Ariel Corporation

Q20

Q21

5.4 Axial Flow Compressors

American Petroleum Institute (API) Standard 617 defines the minimum requirements for Axial and Centrifugal Compressors for Petroleum, Chemical and Gas Industry Services.

5.4.1 Arrangement

A multistage axial flow compressor has two or more rows of rotating components operating in series on a single rotor in a single casing. The casing includes the stationary vanes (the stators) for directing the air or gas to each succeeding row of rotating vanes. These stationary vanes, or stators, can be fixed- or variable-angle, or a combination of both.

A typical axial flow compressor cross section is shown in Figure 48. The major components and their nomenclature are depicted.

Figure 48
Typical Axial Flow Compressor Cross Section

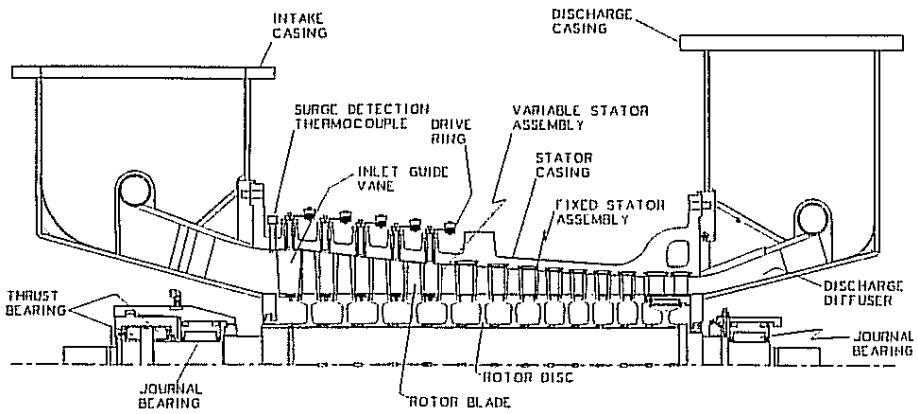

Dresser-Rand Company

There are two basic types of blading that are employed in an axial flow compressor: rotating and stationary.

The first row of stationary blades is unique. These blades are referred to as inlet guide vanes. These vanes are designed to provide prerotation to the air or gas stream prior to entry into the rotor blades. Blade profiles have airfoil-shaped cross sections.

The majority of the stationary blades within the compressor are simply called stators. There exist two types of stator vanes, variable and fixed.

Variable stator vanes fit through the stator casing or a blade carrier and are attached to a drive mechanism that moves the vanes with respect to the air flow. A more detailed description of the actuating system is provided below. The inner end of each vane can be shrouded to improve the stress condition and to reduce the interstage losses through sealing strips mounted in the inner shroud.

The actuation system used to move the variable stator section is usually a combination of linkages designed to move the vanes simultaneously. Each variable stator vane is connected to a driving ring by a small link. These rings, one for each stage of blades, are individually connected to a main driving shaft so that the stages move simultaneously. The drive shaft is connected to a hydraulic or pneumatic power piston, which opens and closes the stator vane.

Different designs are available from various manufacturers. Desirable features include the following:

a. Solid or "tight" linkage systems to prevent slow or inefficient actuation of the vane position.

b. A minimum number of “joints” in the system that can wear with time and become loose or seize due to the presence of dirt.

c. Dual power cylinders (one on each side of the unit) to provide even movement of all vanes.

Fixed stators are typically welded assemblies comprising the vanes and inner and outer shrouds. These assemblies are fitted into machined grooves in the stator casing. The fixed stator assembly is also fitted with sealing strips for leakage reduction.

The rotating blades within the axial compressor are appropriately called rotor blades. These are tapered and contoured airfoil sections. The rotor blades have an attachment on one end to allow for assembly within the rotor.

A simplified partial section of an axial flow compressor flow path is shown schematically in Figure 49.

Figure 49
Schematic Presentation of an Axial Flow Compress Flow Path

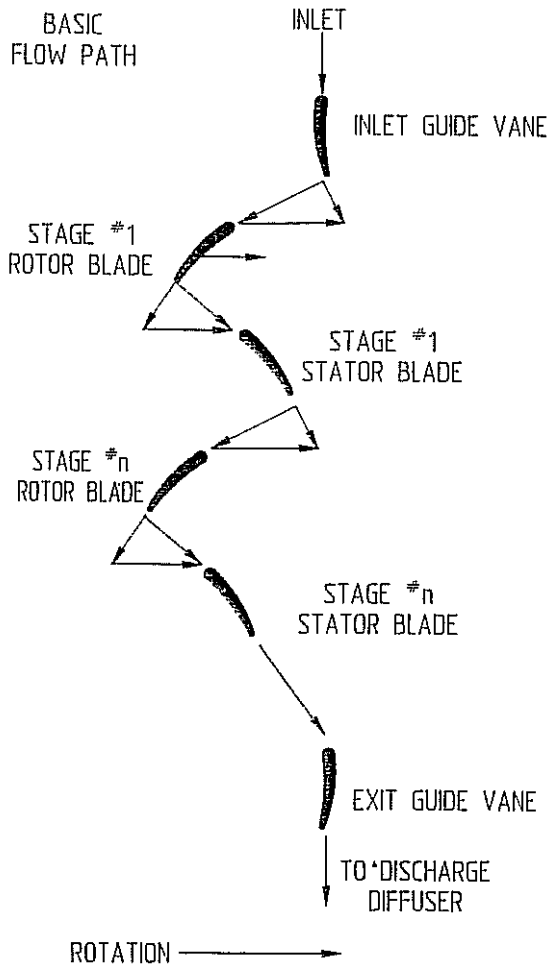

Dresser-Rand Company

The basic components typically include the following:

a. An inlet duct to collect and accelerate the gas toward the inlet guide vanes with minimum pressure losses.

b. A row of inlet guide vanes to impart prewhirl to the gas stream in the direction of rotation for smooth entry to the rotor blades and for the control of the inlet relative Mach number.

c. A multiplicity of stages, each consisting of a row of rotor blades and a row of stator vanes of airfoil shape, to increase the static and/or total pressure of the flow. The total energy transfer to the gas stream is accomplished by the rotor blades. The hub stagger (the angle between the blade chord and the axis of rotation) is fixed, thereby fixing the amount of work done by each stage and consequently fixing the number of stages necessary to achieve the required discharge pressure. The standard frame design is adjusted to meet the required air flow by varying the rotor and stator blade heights and the unit operating speed.

d. A row of exit guide vanes, oriented to remove the whirl component from the flow leaving the last stage stator vanes, and to begin deceleration of the flow.

e. A discharge diffuser to further decelerate the flow and to convert the residual velocity energy into static pressure rise.

5.4.2 Control

The successful control of an axial compressor requires knowledge of the flow behavior likely to be encountered in the machine. Violent overall instabilities identified as stall, surge, and choke are possible in axial compressors and the controls must be in place to prevent the likelihood of their occurrence.

a. Stall is a commonly used term with regard to axial flow turbomachinery. It is too often incorrectly used as a cause of problems, mainly due to a misunderstanding of the true flow behavior during a stalled condition. Stall occurs when the flow separates from the surface of the blade. An aerodynamic disturbance is formed downstream of the point of separation.

   Stall is a generalized term. It is often used with additional descriptors to explain the flow condition that causes the separation. For instance, the separation can occur on either side of the airfoil. High positive incidence stall, caused when the angle between the flow and the inlet to the rotor blade is too large, causes separation of the airflow from the suction, or convex, side of the airfoil. High negative incidence stall causes separation of the airflow from the pressure, or concave, side of the airfoil.

Conditions of rotating stall can be established when a group of blades becomes stalled. This is a phenomenon of stall cells being created within a stage. As the first blade stalls, it causes a disturbance to the airflow of the adjacent blade, eventually causing it to become stalled. As each subsequent blade becomes stalled, the last blade in the patch of stalled blades begins to recover. Thus, the effect is a rotating patch of stalled blades.

Whether a few blades experience stall or a rotating stall cell is formed, the mechanical damage possibly caused by this unstable aerodynamic condition can be significant. It is difficult to determine the actual loads induced on the blades during such an event. Laboratory testing has shown that loading levels can, reach ten times normal levels.

b. As with any dynamic compressor, surge occurs when the slope of the pressure ratio versus capacity curve becomes zero. It is associated with the complete breakdown of flow through the machine, and it takes place when several adjacent stages are subjected to high positive incidence stall. At any given speed, as the inlet flow is reduced, a point of maximum discharge pressure is reached. As flow is further reduced, the pressure developed by the compressor tends to be lower than the pressure in the discharge line and a complete flow reversal of an oscillatory nature results. The reversal of flow tends to lower the pressure in the discharge line and normal compression resumes. If no change to either the system back pressure or the operation of the compressor occurs, the entire cycle is repeated. This cycling action is an unstable condition in varying intensity from an audible rattle to violent shock, depending on the energy level of the machine. Intense surges are capable of causing serious damage to the compressor blading and seals. The uncertainties surrounding this oscillating flow are cause for concern.

c. It is standard procedure at process plants to install reliable antisurge control equipment in the compressor piping to prevent operation in the surge region. A typical surge control system should incorporate or encompass recycle loops, i.e., valved bypass piping to provide sufficient flow through the compressor to keep it away from surge. Experience points to the following requirements:

- The system must be electronic rather than pneumatic for the fastest response time, and the surge valve must be interlocked with the trip circuit such that it immediately opens on a train trip.
- The control system logic requires flow, pressure, and stator vane position input.

- The surge valve positioner-operator system must be capable of driving the valve fully closed to fully open in one second and fully open to fully closed in ten seconds.
- The surge valve should open on the loss of any input signal or operator medium.
- The surge valve should be sized to pass full flow at any point along the surge line with the valve at 60% open and with full consideration given to the downstream system pressure drop. The point on the surge line requiring the largest valve and discharge system is normally at maximum speed with stators full open, but a point at lower flow with a lower discharge pressure may in some instances dictate size.
- A check valve should be installed close to the compressor discharge just downstream of the surge valve connection in the discharge line.

In addition to the antisurge control system discussed above, a thermocouple detection system can also be employed to determine the presence of the surge recycling effect.

When an axial flow compressor experiences surge, it essentially undergoes a momentary internal gas flow reversal. This flow reversal will slightly elevate the stator casing inlet gas temperature. The increase results from the intermediate gas, which has been heated by compression, flowing back into the inlet area.

This detection system should be implemented in addition to a primary antisurge control system. It consists of thermocouples installed in the airstream just upstream of the inlet guide vanes. Upon reaching a predetermined setpoint, which indicates surge, a signal is sent commanding the surge control valves to go to the full open position. Upon reaching an acceptable level of temperature, i.e., the compressor has recovered from the surge, the surge valves are permitted to return to the normal position and control of the surge valve is returned to the primary surge control system.

d. Choking occurs when the slope of the pressure ratio versus capacity curve approaches infinity. It occurs at the point where a further increase in mass flow through the cascade is not possible. Choked flow is associated with the flow velocity reaching a Mach number of 1.0 at some cross section within the machine.

Figure 50
Operating Envelope for Axial Compressors

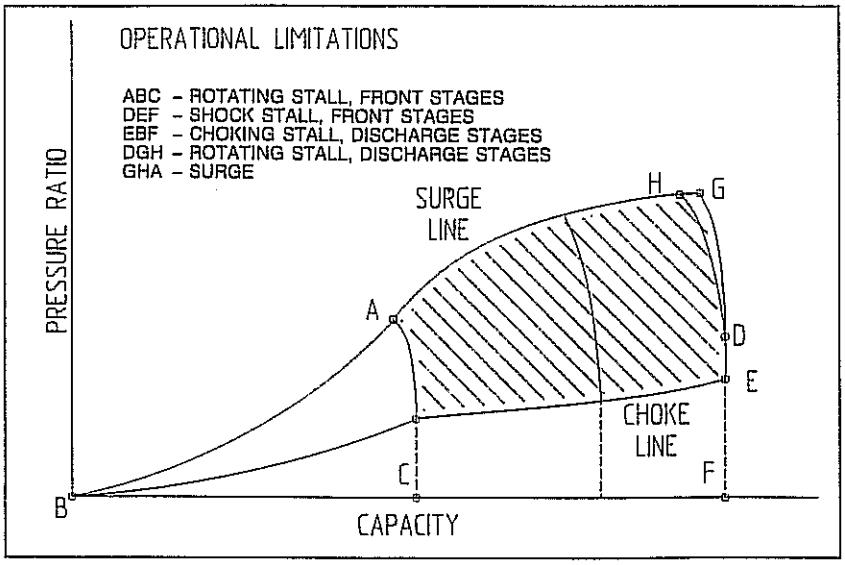

Dresser-Rand Company

Unlike with surge, there is no accompanying increase in noise level or machine vibration amplitude. Choke is a "quiet" phenomenon, which, when operation continues for extended periods of time, can cause damage to the rotating blades, with eventual failure possible.

Choke Control

A choke control system is needed to avoid operation within the detrimental region. A typical system would encompass a choke valve designed for minimum pressure drop in the open position and capable of full response in ten seconds. The valve would open in the event of signal failure and would respond to a control system using differential pressure (flow) and discharge pressure as inputs.

Surge and choke conditions are affected by geometry, speed, and ambient conditions. Each of the aerodynamic instabilities is most likely to occur within a particular primary region of the performance characteristic. Figure 50 shows these various regions.

5.4.3 Maintenance/Cleaning requirement

a. Like all-machinery, axial flow compressors require both periodic preventive and corrective maintenance. A daily review of key operating data is quite often the best preventive maintenance strategy for axial flow compressors. These data should include various ambient and process parameters that define the operation of the unit. In addition, machinery vibration and bearing temperature data should-be logged. While these daily (or weekly)

records may fail to tell the entire operating history, they can nevertheless establish trends of operation, i.e., has the present problem been progressing slowly for several days or weeks, or is it a sudden change?

Quite often, these records can provide the information essential to avoiding unscheduled shutdowns simply through the establishment of normal trends. Just as important, an abrupt reading might be cause for immediate investigation. Such a situation may call for an unscheduled shutdown to reduce risking catastrophic failure.

To maximize the benefits available from these records, it will be necessary to be consistent. Records must be maintained daily, since without the proper parameters being accurately recorded the validity of the record could rightly be questioned.

A typical listing of the minimum parameters that should be included in the daily log is as follows:

Inlet temperature
Inlet pressure
Inlet relative humidity (dew point temperature)
Unit flow (at inlet or delivered)
Discharge pressure
Discharge temperature
Stator vane Position
Unit speed
Radial vibration amplitude
Axial Position
Surge valve position
Choke valve position
Radial bearing pad temperature
Thrust bearing pad temperature
Lube oil supply temperature
Lube oil supply pressure
Lube oil drain temperatures
Lube oil total flow

It is recommended that the operators discuss the list with the equipment manufacturer and add any items that both parties feel are critical to the analysis of operational fitness of the machinery.

Typical items to visually inspect on a regular (daily) basis are listed below.

- Check the unit for oil leaks at flanges, instrumentation outlets, vane actuator connections, etc.
- Observe the operation of the stator vane linkage during a change of its position. Check for binding of any components.

Ensure smooth movement. "Jumping" or sporadic movement usually indicates mechanical binding or foreign matter in linkage joints.

- Listen to the unit for unusual sounds, such as rubbing (seals or blades) or leaking gaskets. If the sound intensity is significant, investigate the probable causes.
- Check bearing oil drain sight flow indicators to ensure good oil flow through the bearings. Note any significant change in the running level, e.g., much fuller than normal, less flow than normal.

b. Modern axial flow compressors will operate for long periods between shutdowns. Well thought-out metallurgy is essential in the design and manufacture of rotor blade components. External surface coatings are applied to protect the blades from corrosive and erosive attack. Along with the addition of coatings, compressor blade life may be increased by installing inlet air filtration systems.

On-line cleaning of internals is usually considered after severe degradation of compressor performance is noted. With a properly sized and operating inlet filtration system, fouling should be minimized. <u>However, on-line cleaning is treating a symptom rather than curing the cause.</u> The problem is more directly addressed through investigation of the air quality entering the compressor. Proper design of the inlet filtration system has always been important to the manufacturer: proper maintenance of the system must become similarly important to the operator.

There are several on-line cleaning methods employed by operators depending the process and the available cleaning methods. The question of whether or not axial flow compressors should be cleaned during on-line operation is a complex one.

Due to possible problems with each of the cleaning methods currently used, it is appropriate to consult the manufacturer. Below is a short description of some of the systems currently in use. The possible problems, from both the process operation and machine reliability points of view, are also highlighted.

The most effective cleaning procedure for the compressor is a low-speed water/kerosene wash. It is to be performed at approximately 30% of normal speed. The compressor is essentially soaked in the cleaning solution for approximately thirty minutes. A rinsing cycle removes residual cleaning fluid, and returning to full speed effectively dries the internal components of the compressor.

This is technically the safest and most effective cleaning method. It is, however, the least desirable from the operational view, since

it requires the unit to be removed from the process for approximately one hour. This is the approximate time required to complete the procedure.

A second process employed today is a water/solvent spray wash system. It is to be used at full speed and, in most cases, is not detrimental to the process. This system requires the addition of a spray nozzle assembly into the inlet casing of the compressor unit. Commercially available cleaning fluids are used.

Possible problems include the incomplete atomizing of the fluid prior to entry into the compressor. The blading could be damaged by the impingement of large water particles. In addition, pulsations created on the rotor blades from the spray nozzles add another excitation to be considered in the natural frequency and stress analysis. Most importantly, while this system is somewhat effective on the first stage on the machine, the cleaning efficiency is drastically diminished at each successive stage. The cleaning medium is simply centrifuged to the casing wall and has lithe effect on either the rotating or stationary blades downstream.

The third method of on-line cleaning is one that has been employed in similar equipment for some time. This procedure entails the introduction of crushed walnut shells (or apricot pits) into the airstream. These “cleaning media” are introduced into the piping upstream of the inlet casing. They are fed at a rate of approximately 50 pounds every two minutes.

The possible problems with such a system are very similar to those encountered with the spray wash system. The solids are centrifuged to the casing wall so quickly that the effectiveness of the system is severely diminished beyond the first stage. In units employing blade coatings, nut shells or pits can cause accelerated erosion of the blade coatings. In any event, strict control of the injection rate will be required.

Corrective maintenance may become necessary every three to five years. At that time, inspection and replacement of wearing parts is often appropriate. Prior to the inspection shutdown, an inventory of the available spare parts should be performed. Discussions with the manufacturer should take place to determine that proper quantities of spares are available to ensure a complete and timely turnaround of the machine.

A typical inspection and replacement shutdown may require approximately two weeks. During that time, typical inspections would include the following:

- Rotor blade cleaning and magnetic particle nondestructive testing to ensure the integrity of parts if a complete spare rotor is not available.
- Nondestructive testing of rotor discs, particularly in the area of blade attachment, to check for evidence of stress-related damage. The normal method is dry powder magnetic particle inspection.
- Liquid penetrant nondestructive testing of stationary blading to ensure the integrity of the welded joints within the assemblies.
- Bearing clearance check on the previously installed bearings as well as the new bearings. Visual and dimensional inspection of the bearings for evidence of rubbing, wiping, and unusual wear.
- Rotor check balance to correct any unbalance introduced by rotor blade replacement. Rotor tip clearance check to ensure that proper running clearances are established for safe operation.
- Variable stator vane linkage check to replace any worn bushings or locking/locating pins.
- Instrumentation check to ensure the operational indicators to be recorded are accurate and available.
- Coupling inspection for tooth wear on gear couplings and diaphragm check on diaphragm couplings.
- Axial rotor-to-stator clearance check during reinstallation of the rotor assembly to ensure the proper rotor-to-thrust bearing positioning.
- Seal clearance check on all shaft and bearing assemblies. The shaft should be inspected on removal from the unit for any signs of seal contact.
- Inlet filtration system check to ensure the filter elements are clean and secure. In addition, the inlet piping should be inspected from the inside to ensure no loose pieces exist or foreign objects are inside, which could enter the unit and cause damage to the compressor.

Q22

5.5 Liquid Ring Compressors

American Petroleum Institute (API) Standard 681 defines the minimum requirements for Liquid Ring Vacuum Pumps and Compressors for Petroleum, Chemical and Gas Industry Services. It should be used as the basis for liquid ring type compressors in process service.

5.5.1 Arrangement

The rotor is positioned centrally in an oval-shaped body. Upon rotation, which proceeds without metal to metal contact, a ring of liquid is formed which moves with the rotor and follows the shape of the body. At the two points of the nearest proximity of the rotational axis and body, this completely fills the chambers of the rotor and as rotation proceeds, it follows the contour of the body and recedes again, leaving spaces to be filled by the incoming gas. These spaces are connected via the porting to the inlet of the compressor. As a result of the suction action thus created, gas is pulled into the compressor. As the rotation progresses, the liquid is forced back into the chambers, compressing the gas. This gas is forced out of the discharge port and then leaves the compressor via the outlet flange. The compressor is fed continuously with liquid which serves to seal the clearances between inlet and discharge port and remove the heat of compression. This liquid leaves the compressor together with the gas to be compressed and is separated from the gas in a discharge separator. (See Figure 16.)

When discharge pressures are low (up to 172 kPa) the compressor casing is a round body with a shaft mounted impeller positioned at a point eccentric to the centerline of the body. The centrifugal action of the rotating impeller forces the service liquid introduced via channel towards the periphery of the compressor body forming the liquid ring.

When pumping action is achieved, the gas mixture being handled is introduced to the impeller through the suction port, in the intermediate plate, causing a vacuum at the suction.

The gas mixture fills the impeller cavity between the inside diameter of the liquid ring and the root of the impeller blade. As the impeller rotates, the impeller blade immersion in the liquid ring increases reducing the volume between the liquid ring and the root of the impeller blade. The result is the compression of the gas mixture until it reaches the discharge port, located in the intermediate plate. The gas mixture exits through the discharge port.

During the compression cycle heat is being imparted to the liquid ring. In order to maintain a temperature below the vapor point of the service liquid, cooling must be applied. Cooling is achieved by continuously adding a cool supply of service liquid to the liquid ring. The amount of service liquid added is equal to that discharged through the discharge port together with the compressed gas mixture. The gas mixture and service liquid is eventually passed through the compressor discharge for separation. (See Figure 15.)

There are three possible types of installations: once-through service liquid, partial recovery service liquid and total recovery service liquid. The service liquid entering the compressor connection should have a pressure of minimum 40 kPa above the compressor operating inlet

pressure. A booster pump will be required if the service liquid is available at lower pressures. Separator/reservoir is considered a pressure vessel and as such it must be engineered and built to the applicable codes (ISPESL, ASME, etc.). Accessories such as pressure relief valve, check valve (non-return valve), automatic float type drain valve (water trap), etc. are required in a compressor system. Figures 51, 52 and 53 illustrate the three possible types of installations.

Typical Installation Schematics for Compressors

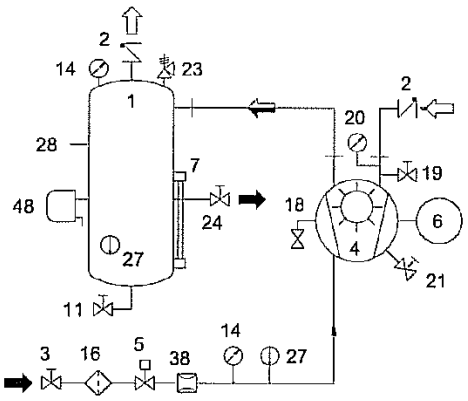

Fig. 51

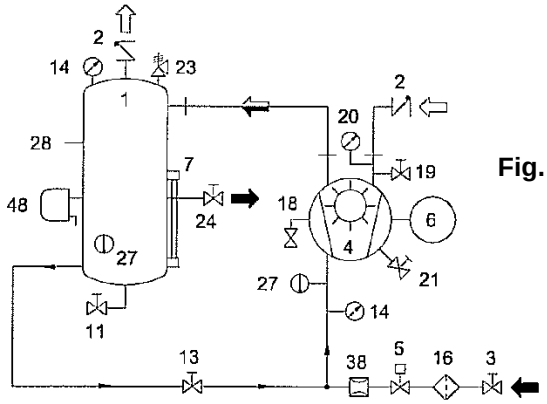

Fig. 52

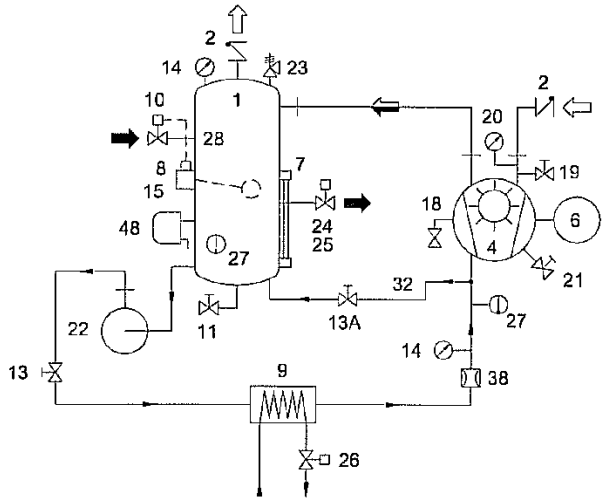

Fig. 53

1 Separator/ reservoir
2 Non-return valve
3 Shut-off valve (check valve)
4 Liquid ring compressor
5 Solenoid valve
6 Electric motor
7 Level gauge glass
8 Float valve
9 Heat exchanger
10 Make-up solenoid valve
11 Drain valve
13 Flow control valve
13A By-pass valve
14 Pressure gauge
15 Level switch
16 Filter (y-strainer)
18 Automatic drain valve (check valve)

19 Valve for spare vacuum connection
20 Vacuum gauge
21 Anti-cavitation valve
22 Circulating pump
23 Pressure relief valve
24 Overflow valve
25 Draining solenoid valve
26 Solenoid valve for heat exchanger cooling liquid
27 Temperature gauge
28 Fill-up connection
32 By-pass piping
38 Orifice flow
48 Automatic drain valve or water trap

Air or Gas
Liquid-Gas mixture
Liquid

Once-Through Installation

The service liquid enters the compressor and is normally discharged to the drain after being separated from the gas.

Partial Recirculation Installation

The service liquid enters the compressor and is discharged to the recirculation tank. An additional controlled flow of cool service liquid is introduced (make-up) while an equal amount of liquid (plus any condensate) is discharged from the separator tank via an overflow connection to maintain the working level in the same horizontal plane as the compressor shaft center line. The cool make-up removes heats of compression and condensation from the recirculated liquid.

When partial recirculation is employed, two conditions become important: l) the gas/liquid outlet temperature and 2) the amount of cool make-up required. The amount of cool make-up required in turn depends on the required design capacity of the compressor unit versus the actual compressor capacity with the actual service liquid supply temperature.

Total Recirculation Installation

The service liquid enters the compressor, is discharged to the recirculation tank, cooled in a heat exchanger, and returned to the compressor.

When totally recirculated systems are utilized, again two considerations are important: 1) the outlet gas/liquid temperature and 2) the design service liquid supply temperature to the compressor.

In order to minimize the coolant flow rate to the heat exchanger, the design service liquid supply temperature to the compressor should be selected at the highest temperature at which the selected compressor model will be equal to the design capacity (with the warmest coolant to be supplied) including any required safety factor.

5.5.2 Effects and Corrections for Various Liquid and Gas Properties on Pump Performance

Vapor Pressure

As previously stated, the vapor pressure of the service liquid will have a direct influence on the gas handling capability of the liquid ring compressor.

When service liquid other than water is used, correction for the vapor pressure can be made by matching the liquid's vapor pressure with that of water (from steam tables); finding at what temperature the water would have such a vapor pressure and then apply correction factors as per Manufacturer’s published correction factors.

Service Liquid Effects

If the liquid ring compressor is to handle gases containing water vapors, then the use of water as service liquid may be the best choice. Most of the incoming vapors will condense in the pump and be discharged as condensate together with the service water and the non-condensables. Normally, this mixture is discharged into a gas/liquid separator where the gases are separated from the liquid by gravity.

The separated water may be drained or returned to the compressor after it has been cooled via a heat exchanger or after a fresh make-up has been added in order to remove the heat imparted by compression and condensation. Since the service liquid must always be compatible with the process, the use of water as a service liquid is not always advantageous or possible. When the gases contain condensables other than water vapor, service liquids which are chemically compatible with these vapors must be selected. The physical characteristics of the chosen liquid are important.

In many applications, it is possible to select a service liquid which will help in the condensation of the incoming vapors and will separate by gravity from the non-condensables in the separator just as we have seen in the case of air and water. However, in some instances, the chosen service liquid when mixed with the condensables may create a new mixture. This new mixture after being discharged must be treated so that the compressor will reuse the clean liquid as originally selected and not a contaminated liquid which may have different physical properties.

Density Effects

The compression of a gas is obtained from the rotating liquid ring which must have at least an energy equal to the given isothermal compression energy. The amount of energy needed varies with the impeller rotating speed (RPM), the density of the service liquid used, and the volume of service liquid. The inner contour of the liquid ring is influenced by the absorbed energy which, in turn, will effect the suction capacity and therefore, performance. Since energy needed varies directly with density, a correction for design power must be made if using a service liquid other than water. Since specific gravity is a measure of the density of a compound relative to water, this is a convenient property to relate performance.

Viscosity Effects

The compressor capacity and especially power requirements are greatly affected by the viscosity of the service liquid. The influence of viscosity on the suction capacity is normally relatively small and

depends above all on the sealing attainable between the impeller and intermediate plate.

The influence of viscosity on the absorbed power will depend upon the Reynolds number. The BHP increases as the viscosity increases.

Solubility of Gases

The solubility of the inlet gases in the service liquid must be taken into consideration when selecting a liquid ring compressor.

Gas compressed will dissolve in the service liquid at the discharge pressure. When this enriched mixture returns to suction side, outgassing will occur at the reduced pressure. The "outgas" will take some of the space in the impeller cells which was available for the incoming gas. Hence, a reduction in compressor capacity will be experienced.

Generally, the decrease in capacity connected with this phenomena is not as great as the theoretical calculations would suggest. The fluid is exposed to this low pressure area for a very short time, hence complete outgassing of the dissolved gas is never fully reached.

Heat of Compression

During compression of any gas, most of the energy used for compression is converted into heat. In liquid ring compressors, most of the heat generated is absorbed by the service liquid and hence, discharged with the liquid. The compression process is, for all practical purposes, isothermal (constant temperature).

It can be assumed that about 10% of the quantity of heat is dispersed due to heat transfer, to the surroundings and the balance (approx. 90%) is passed on to the service liquid. As a rule, the incoming gas has low heat value which has little effect on the temperature of the service liquid.

Since the gas is so thoroughly mixed with the service liquid during compression, it can be assumed that the gas at compressor discharge has the same temperature as the liquid.

When the entrained gases are condensable, there will be additional heat to be removed by the service liquid due to condensation of these gases.

Liquids in the Suction Line

Liquid ring compressors are capable of handling moderate liquid flows over and above the normal service liquid flow.

This will, however, cause a reduction in compressor capacity and increase in horsepower. Hence, it is advisable to limit the incoming liquid flow to about 1 to 2% of the gas volume flow (this will depend on the compressor model).

Usually, the entrained liquid is continuous, hence reducing the normal service liquid flow by the same amount of entrained liquid is a good practice. When dealing with gases containing larger liquid flows, it is recommended a separator with corresponding liquid pump be installed before the compressor.

6.0 COMPRESSOR COOLING

Q23

Air/gas coolers are used with all of the above types of compressors to reduce the air/gas temperature before, during or after compression. Cooling of the air/gas has two primary objectives:

- To reduce the air / gas temperature and thereby the volume.
- To condense and remove water vapor and other condensables.

6.1 Pre-coolers

Pre-coolers are sometimes required to cool the gas at the inlet of a compressor when the temperature of the gas is too hot for the safe operation or mechanical design of the compressor. This condition may occur when receiving hot gasses from a process stream or from hot gasses that are by-passed from the discharge of a compressor stage. Note that selection of the cooler and the cooling process must consider the possible danger of mechanical damage to the compressor, especially high speed centrifugal and axial compressors, if liquid droplets are permitted to enter the compressor.

6.2 Intercoolers

Energy saving is the main advantage and aim of cooled compression. Since the energy required is proportional to the intake temperature, the compression process is divided into a number of steps or stages. The intake temperature of each of these stages is reduced by use of an intercooler. The advantage of inter-cooling is readily apparent when the thermodynamically attainable energy savings are compared with the cost of the coolers and the cooling medium. The thermodynamic study must take into account the flow resistance of the cooler. This pressure loss is compensated by additional compressor work.

The number of intercooling stages depends on the overall pressure ratio π, the isentropic exponent κ, which is determined by the temperature rise during compression, and the temperature differential Δt between the intake temperature of the first stage and the recooling temperature in the subsequent stages. The recooling temperature is determined by the temperature of the cooling medium and the heat exchange surface of the cooler. The possible

advantage of intercooling can be visualized with the help of the following example using Figure 54.

Figure 54
Influence of Intercooling on Gas Compression Efficiency

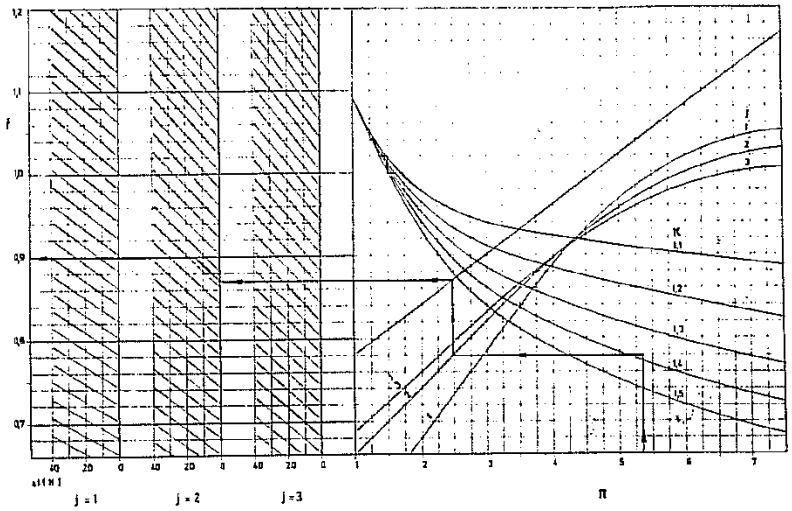

Mannesmann Demag

Example

Pressure ratio π = 5.35:1
Isentropic exponent κ = 1.38
Number of intercooling stages j = 2
Result:
Power Factor f = 0.9

For the case in question, intercooling twice would result in a power saving at the compressor coupling of about 10%.

A separator is usually used after the exchanger to collect and discharge the condensed vapors.

6.3 Aftercoolers

Aftercoolers are utilized to cool the gas exiting the compressor to reduce its volume and allow for smaller more economic piping and to condense and remove condensable vapors. By eliminating water vapor and other condensable, freezing in outdoor piping can be minimized. Aftercoolers are generally of the shell and tube design with the coolant (usually water) on the shell side of the exchanger. Air-cooled exchangers are also in use. A separator is usually used after the exchanger to collect and discharge the condensed vapors.

6.4 Separators

Separators can be single or multi-stage. They employ the principals of centrifugal force, impingement and mist elimination to remove as much as

99% of liquid droplets down to 4 microns in size if properly selected. Different styles are available are available from numerous manufacturers. Manufacturers have calculation and selection procedures that permit proper sizing for the applications

7.0 DRIVERS

Q24

7.1 Motors

One of the major reasons for selecting an electric motor driven compressor is the broad operating range. Whereas a turbine driven compressor is limited to operations that require more than fifty percent of rated power, electric motors can operate for a range of 20% - 100% of design. Additionally motors can operate at full power during the summer when gas fired engines tend to drop off in available power production. Also key is the fact that motors can be stopped and started 20,000 times in their normal lifetime whereas gas turbines can only tolerate a few hundred stop/start cycles before they require maintenance.

There are two principal motor types to consider: Induction and Synchronous.

The Induction motor is the more robust, cost effective of the two motor types. Induction motors are generally a better choice for reciprocating type compressor options where the load varies greatly and the pulsations are present. The robustness of the induction motor comes from its relatively simple design. The penalty is a slightly lower efficiency and higher power draw than a similarly sized synchronous motor. In high-speed applications, greater than 8,000 rpm, the induction motor is the safest choice.

The Synchronous motor is a good fit for the centrifugal compressor type application where a high load factor is expected. The synchronous motor is preferred in cases where the load factor is high because it is more efficient than an induction motor and because of its unity power factor.

Compressor operations in areas with very high power rates might sway some operators to install a synchronous motor, even on reciprocating compressor applications, because the power factor can be adjusted to lead or lag the utility's system. A leading power factor benefits most utilities in that it gives them more system capacity and thus can be used to negotiate more favorable conditions.

Careful selection of the proper compressor drive motor enclosure will help ensure longer and more reliable motor life. A basic understanding of various motor enclosures will aid in the selection of a motor that will perform best in its application, meet various code and sound level specifications, and identify the most cost effective design.

There are essentially five different motor enclosures that are supplied with most compressors. These are shown as follows with the equivalent IEC codes

for enclosures only. Note that IEC motors are much different than NEMA frame and other larger frame motors.

7.1.1 Open Drip Proof (ODP) or (IP23)

This is the standard motor enclosure most suitable for industrial applications. Cooling air will enter through louvered openings, pass over the rotor and stator, and exit through the openings in the sides of the frame. This open enclosure design should not be selected for outdoor installations, washdown areas, and most petrochemical and chemical process applications. These motors will typically meet an 85 DBA unloaded sound level requirement.

7.1.2 Weather Protected Type II or (IPW24)

This open enclosure is designed for use in adverse outdoor conditions. The air intake is in the top half of the motor to minimize entrance of ground level dirt, rain or snow. For certain models, this enclosure can be modified to include filters for dirty conditions; however this will often result in frequent filter cleaning. The air passage includes three abrupt 90 degree changes in direction plus an area of reduced velocity to allow solid particles or moisture to drop out before the ventilating air contacts active parts of the motor. All particulates except for super fine dust are virtually eliminated. In addition, WPII motors include anti-corrosion treatment on both internal and external components, a weather proof conduit box, waterproof insulation, and space heaters to keep the motor dry during periods of nonuse. WPII motors are typically 2-3 DBA quieter than ODP motors, but when faced with sound restrictions, you should always ask to be sure.

7.1.3 Totally Enclosed Water-to-Air Cooled or (IP54)

This enclosure also isolates all critical motor components from the surroundings. It can be used indoors or outdoors, and in clean or dirty environments. TEWAC enclosures include a water cooled heat exchanger mounted in the top portion of the motor to cool the recirculated ventilating air. Motor heat is conducted away by circulating water and not by discharged air. Key advantages of TEWAC motors over other totally enclosed motors include better efficiencies, shorter frames, lower cost, and much lower sound levels. TEWAC motors can also be much more cost effective in high altitude applications, as the motor cooling is not affected as much by the thinner air. TEWAC motors will require some maintenance of the heat exchanger to maintain optimum performance. The heat exchanger must be constructed as to resist ambient conditions that could cause corrosion.

7.1.4 Totally Enclosed Air-to-Air Cooled or (IP54)

This enclosure will also isolate critical motor components from the surroundings. In contrast to the TEWAC, the TEAAC enclosure discharges heat in the immediate area of the motor. The construction of this enclosure utilizes a top mounted air-to-air heat exchanger. External air is drawn in by a shaft mounted fan enclosed in a housing located opposite the drive. The air is forced through the cooling tubes at high velocity to promote efficient cooling and cleaning of the tubes. A TEAAC motor will be noisier than an ODP, WPII, or TEWAC motor. Typical sound levels are around 90DBA, so if there are sound restrictions, ask for a lower sound design. The heat exchanger must be constructed as to resist ambient conditions that could cause corrosion.

7.1.5 Totally Enclosed Fan Cooled or (IP54)

This enclosure is often supplied on smaller motors for compressors where isolation of critical motor components from the surroundings is required. Most of these designs use a round, cast-iron ribbed construction design, where the cooling air is pulled through the grill of the external shaft mounted fan and is directed over the frame fins by the fan hood. As mentioned earlier, TEFC motors are often less expensive than WPII within NEMA frame sizes. However, be careful when specifying TEFC motors when there are sound restrictions, as due to the cooling fan; sound levels can be 90DBA or above unless lower levels are specified.

For smaller NEMA frame motors, TEFC enclosures are often less expensive than WPII enclosures.

Important factors in motor selection include:

Never specify ODP motors for an outdoor application.

If fine dust cannot be kept away from the motor, an enclosed motor should be used.

Sound levels are additive. If a motor is rated at 85DBA, the overall compressor package will be at least 3DBA higher.

TEWAC motor enclosures can offer big advantages over TEAAC and TEFC.

7.2 Steam Turbines

Steam turbines have been used to drive compressors in a large number of applications. Turbines have been particularly useful as drivers for centrifugal and axial compressors, both single and multi-stage. Direct connected turbines are available for any desired horsepower and the speeds of steam turbines can be controlled to match the speed requirements of the compressor. Turbines with speeds up to and above 30,000 rpm are available. The horsepower availability decreases as speed increases. Both condensing and non-condensing turbines are used. Condensing turbines with very low exhaust

conditions are limited to speeds in the range above 6000 horsepower. By decreasing the amount of vacuum, higher speeds and horsepower become available.

Steam turbines are also applied with helical-lobe rotary compressors, but are rarely applied with other rotary compressors and all reciprocating compressors, since to apply these would require a reducing gear drive between the turbine and the compressor.

7.3 Variable Speed

Variable speed control has its application with all types of compressors. The following is a brief discussion of the methods of speed control used for each type of compressor. Variable speed control is highly desirable since it can be applied to match the output to the demand directly.

7.3.1 Reciprocating Compressors

In the past both integral steam engines and integral gas engines were used to drive reciprocating compressors. Steam engine driven compressors have a wide range of speed control and operate smoothly over a speed range of from 20% to 100%. Internal gas engines operate well throughout a speed range of from 50% to 100% with smooth throttle control.

Most compressors today are driven by electric motors. The options for speed control include 2-speed motors. DC motors and adjustable frequency drives. 2-speed motors are not well adapted for use with large compressors due mainly to the fact that, in contrast to dynamic compressors, reciprocating compressors have a constant torque over the entire speed range. A wide speed range can be obtained with DC motors, but the expense of these drives can become prohibitive.

Developments in thyristor technology and electronic control have made the use of adjustable frequency drives the most popular choice for large reciprocating compressors. Adjustable frequency drives are reliable and easier to maintain than other speed control mechanisms. Both induction and synchronous motors can be controlled by adjustable frequency drives.

The use of variable speed drives with reciprocating compressors does present certain factors that must be addressed. Among these are the following:

a. The flywheel effect decreases in proportion to the cube of the speed.

b. The compressor could be damaged if torsional and other vibrations coincide with operating speeds.

c. An independently driven lube oil pump should be utilized, since poor lubrication will occur at low speeds when using a crankshaft driven oil pump.

d. Gas pulsations in the piping system must be controlled over the entire speed range.

e. To ensure piston-rod load reversal at the bottom speed, it may be necessary to add some physical mass to the reciprocating parts of the compressor.

7.3.2 Centrifugal and Axial-Flow Compressors

Methods of speed control used with centrifugal compressors includes: steam turbines with throttle control, variable frequency control (VFD), multi-stage variable drive (MSVD) and high speed motors. Steam turbines have been discussed above and are advantageous because they often do not require a gear reducer.

Variable frequency drives are used extensively, but a relatively newcomer, the multi-stage variable drive (MSVD), is creating a lot of interest and may well become the preferred method of speed control where speed variations range between 80% and 105% of the design conditions. This drive called "Vorecon "is a unique type of hydrodynamic coupling that provides a transmission efficiency of greater than 95%. The "Vorecon" drive was developed by Voith Turbo of Germany and consists of a hydrodynamic adjustable torque converter combined with fixed and revolving planetary (epicyclic) gears.

High-speed motors are becoming an attractive option in the 7000+ horsepower ranges. The high speed motor can eliminate the gearbox and the conventional bearing system, resulting in an energy efficient, low maintenance package. High speed motors driven by VFD's offer the widest operating range and the smallest footprint. There are cases where gas turbines have been replaced with high-speed motors very cost effectively by using the existing compressor.

7.3.3 Rotary Screw Compressors

Rotary screw compressors are normally driven by either induction or synchronous motors with speed control, when applicable, by a variable frequency drive. Speed control is also accomplished using steam turbines and torque converters.

7.4 Gas Turbines

Gas turbines have been applied to drive compressors in large number of applications. They are most suited for driving such high speed types as

centrifugal or axial-flow dynamic machines and for certain helical-lobe type machines.

The open (once-through) cycle is used to compress air into a combustion chamber or combustor into which fuel gas or oil is injected mid burned. The result is a high-temperature gas/air mixture that flows through an expander turbine. Part of the power developed is used to drive the axial compressor. The rest is available for use as a prime mover.

Advantages of simple cycle gas turbines include: low to moderate capital cost, minimum installation cost, no external power or cooling water required, minimum operating labor required, high reliability and high availability.

Maintenance costs are relatively low when operated continuously. However, each start, stop and load change of a combustion gas turbine subjects its hot-gas parts to thermal cycling increasing maintenance costs and reducing unit life.

Because of the loss in waste gas heat, the simple open gas turbine cycle is low in thermal efficiency (16 to 25%). Better efficiencies are obtained by using the waste gas to heat the air entering the combustor.

The gas turbine cycle becomes much more efficient if the hot exhaust gasses are used to generate steam or to perform a process heating function.

Gas turbines should be essentially used as constant speed machines, since their efficiency drops rapidly when speed is reduced.

8.0 GLOSSARY FOR COMPRESSOR AND THERMODYNAMIC TERMS

Absolute Pressure - The total pressure measured from absolute zero (i.e., from an absolute vacuum).

Absolute Temperature - The temperature of a body referred to the absolute zero, at which point the volume of an ideal gas theoretically becomes zero. (Fahrenheit scale is minus 459.67°F / Celsius scale is minus 273. 15°C).

Actual Capacity - is the quantity of gas actually compressed and delivered to the discharge system by the compressor at rated speed and under rated suction (inlet) and discharge conditions. Actual capacity is expressed in cubic feet per minute or cubic meters per hour and is referred to the first stage inlet flange temperature and pressure.

Adiabatic Compression - A type of compression where no heat is transferred to or from the gas during the compression process.

Adiabatic Efficiency - Ratio between measured shaft power and the adiabatic compression power, referring to measured mass flow.

Aftercooler - Heat exchangers for cooling air or gas discharge from compressors. Designed to reduce the temperature and liquefy condensate vapors. Both air cooled and water cooled units are available.

Aftercooling - The removal of heat from a gas after compression is completed.

Air - A colorless, odorless, tasteless gas. A mixture of individual gases. The gaseous mixture surrounding the earth. Standard density of dry air free of carbon dioxide (0°C, 101,325 kPa) is equal to 1,292 8 g/L. Standard conditions for air in spectroscopy are 101,325 kPa, 15°C, 0,03 % CO2, dry.

Air Cooled Compressor - A compressor cooled by atmospheric air circulated around the cylinders or casing.

Air Receiver - A receptacle which serves to store compressed air for heavy demands in excess of compressor capacity.

Amagat's Law - States that the volume of a mixture of gases is equal to the sum of the partial volumes which the constituent gases would occupy if each existed alone at the total pressure of the mixture.

Ambient - Undisturbed environmental surroundings, particularly to air and temperature.

Amonton's Law - States that the pressure of a gas, at constant volume, varies directly with the absolute temperature.

Anti-Pulsation Tank - Sometimes called a pulsation damper this is a small receiver fitted on the inlet or discharge of a reciprocating compressor. The device is designed to remove the resonance from the compressor thereby reducing noise.

A.P.I. - American Petroleum Institute

ASHRAE - The American Society of Heating, Refrigerating and Air Conditioning Engineers, Inc., (ASHRAE) is an international membership organization operated for the exclusive purpose of advancing the arts and sciences of heating, refrigeration, air conditioning and ventilation, the allied arts and sciences, and related human factors for the benefit of the public.

A.S.M.E. - American Society of Mechanical Engineers

A.S.T.M. - American Society For Testing and Materials. -- a society for developing standards for materials and test methods.

Atmosphere (ATM) - The standard atmosphere is defined as the pressure exerted by a column of mercury 760 mm high with a density of 13,595 g/cm^3 at the standard acceleration due to gravity of 9.8 m/s^2. The 760th part of this pressure unit is the torr. The technical atmosphere (at) denotes the pressure of a force of 1 kg acting on an area of 1 cm^2.

ATA - ACRONYM - Atmospheres absolute. It is the weight of the column of air existing above the earth's surface at 45° Lat and sea level. Is equivalent to 14.696 psiA or 1.0333 kg/sq cm. Equals atmospheres gauge plus 1.

Atmospheres Absolute (ATA) - It is the weight of the column of air existing above the earth's surface at 45° Lat and sea level. Is equivalent to 14.696 psiA or 1.0333 kg/sq cm. Equals atmospheres gauge plus 1.

Atmospheric Dew Point - Is the temperature at which water vapor begins to condense at atmospheric pressure. Is the same as dew point, but is related to atmospheric air only.

Atmospheric Pressure - Weight of the earth's atmosphere over a unit area of the earth's surface, measured with a mercury barometer at sea level, which corresponds to the pressure required to lift a column of mercury 760 mm.

Avogadro's Law - States that equal volumes of all gases under the same conditions of pressure and temperature contain the same number of molecules.

Axial Compressor - A compressor belonging to the group of dynamic compressors. Characterized by having its flow in the axial direction.

Back Pressure - Resistance to air flow; usually stated in inches kPa or psi.

Bar - A unit of pressure equal to 0.99 atmospheres or 14.233 psi.

Bara - The pressure of a system or device measured from absolute zero.

Barg - Bar gauge (similar to the acronym "psig")

Barometric Pressure - Is the absolute atmospheric pressure existing at any given point in the atmosphere. It is the weight of a unit column of gas directly above the point of measurement. It varies with altitude, moisture and weather conditions.

Boyle's Law - States that the volume of a gas, at constant temperature, varies inversely with the pressure.

Capacity - Capacity of a compressor is the full rated volume of flow of gas compressed and delivered at certain set conditions.

Casing - The pressure containing stationary element that encloses the rotor and associated internal components of a compressor, including integral inlet and discharge connections.

Celsius - °C The international temperature scale where water freezes at 0 (degrees) and boils at 100 (degrees). Also known as the centigrade scale.

Centrifugal Compressor - A dynamic compressor. A machine in which air or gas is compressed by the mechanical action of rotating vanes or impellers imparting velocity and pressure to the air or gas. In a centrifugal compressor, flow is in a radial direction.

Air enters the compressor through the machine mounted inlet control valve and flows to the first stage where the impeller imparts velocity energy to the air. The air then proceeds through a diffuser section which converts the velocity energy to pressure energy. A multistage centrifugal compressor is a machine having two or more of these stages.

Charle's Law - States that the volume of a gas, at constant pressure, varies directly with the absolute temperature.

Choke - This term is used for turbo compressors and represents the maximum flow condition. It is sometimes also referred to as stonewalling.

Clearance - The maximum cylinder volume on a working side of the piston, minus the piston displacement volume per stroke. It is usually expressed as a percentage of the displace volume.

Clearance Pocket - An auxiliary volume that may be opened to the clearance space for increasing the clearance, usually temporarily, to reduce the volumetric efficiency of the compressor.

Clearance Volume or Dead Volume - is the volume present in one compressor cylinder or one compressor in excess of the net volume displaced by the piston or diaphragm during one cycle. It is often expressed as a percent of displacement. When applied to a double acting piston compressor, the volumes are referred to both the head end (HE) and the cylinder end (CE).

Cold Start - Starting a compressor from a state of total shutdown. Usually done with "local" control at the compressor. May be done with "remote" control, but only advised with "heavy" instrumentation and monitoring accessories.

Compensating Pump - is a two stage pump designed to inject a measured quantity of hydraulic fluid into the hydraulic piping of a diaphragm compressor at a predetermined time during the compression cycle. The injection point is usually during the inlet portion of the compression cycle.

Compressed - To reduce the volume of, by or as if by pressure.

Compressed Air - Air under pressure greater than that of the atmosphere.

Compressibility - is the property of a substance capable of being reduced in volume by the application of pressure.

Compressibility - is a volume ratio which indicates the deviation of the actual volume from that which has been determined by the Ideal Gas Laws. The compressibility factor is a multiplier.

Compressibility Factor Z - Is the ratio of the actual volume of the gas to the volume determined according to the perfect gas law.

Compression, Adiabatic - Compression in which no heat is transferred to or from the gas during the compression process.

Compression Efficiency - is the ratio of the theoretical work requirement to the actual work required to be done on the gas during compression and delivery. Expressed as a percentage, compression efficiency accounts for leakage, frictional losses, and thermodynamic variations from the theoretical process.

Compression Isothermal - Is a compression in which the temperature of a gas remains constant.

Compression Ratio - is the ratio of absolute discharge pressure to the absolute suction pressure corrected by the compressibility factor of the gas at both the suction and discharge pressures and temperatures. The term compression ratio can be applied to a single stage of compression and multi-stage compression. When applied to a single compressor or a single stage of compression, it is defined as the stage or unit compression ratio; when applied to a multi-stage compressor it is defined as the overall compression ratio.

Compressor - A machine that compresses air, gases.

Constant Speed Control - The unit that runs continuously and matches air supply to demand, by loading and unloading the compressor.

Corrosive Gas - is a gas which attacks normal materials of construction. Water vapor when mixed with most gases does not make them corrosive within scope of this definition. In other cases, the presence of water initiates a corrosive action. Examples are carbon dioxide, hydrogen sulfide, chlorine, and fluorine.

Critical Pressure - is the saturation pressure at the Critical Temperature. It is the highest vapor pressure the liquid can exert. Critical conditions must be determined experimentally for each pure gas. When calculated for a mixture, they are called Pseudo Critical Conditions.

Critical Speed - Rotative speeds at which rotating machinery - axial or screw lobe - pass through unbalanced operation.

Critical Temperature - The highest temperature at which well-defined liquid and vapor states exist. It is the highest temperature at which a gas can be liquefied.

Crosshead Assembly - The assembly connecting the crankcase and connecting rod to the cylinder head and piston rod for translating circular to linear motion.

Crosshead Compressor - A compressor belonging to the group of displacement reciprocating compressors.

Crosshead Loading - The tensile or compressive loading on the crosshead assembly with compressive piston rod loading on the outward stroke and tensile piston rod loading on the inward stroke.

Cut In / Cut Out Pressure - The settings on a pressure switch used to either load or unload the air compressor on a constant speed application, or start or stop the compressor on a start/stop application. The cut out pressure is also known as the maximum pressure, or the point at which there is no air being delivered. The cut in pressure is referred to as the minimum pressure, or the pressure that the system is allowed to fall to before air volume is required.

Cycle - A single complete operation consisting of progressive phases starting and ending at the neutral position.

Cycle Time - Amount of time for a compressor to complete one cycle.

Cylinder - The piston chamber in a compressor or actuator.

Dalton's Law - States that the total pressure of a mixture of gases is equal to the sum of the partial pressures of the constituent gases. The partial pressure is the pressure each gas would exert if it alone occupied the volume of the mixture.

Degrees Celsius (°C) - An absolute temperature scale. ((°F - 32) x 5/9).

Degrees Kelvin (°K) - An absolute temperature scale. The kelvin unit of thermodynamic temperature, is the fraction 1/273,16 of the thermodynamic temperature of the triple point of water. The triple point of water is the equilibrium temperature (0,01 °C or 273,16 K) between pure ice, air free water and water vapor.

Degree of Intercooling - Difference in air or gas temperature between the outlet of the intercooler and the inlet of the compressor.

Delta P - Describes the pressure drop through a component and is the difference in pressure between two points.

Delta T - A term indicating a temperature relationship between two temperatures or temperature variation between two points.

Density - is the weight of a given volume of gas usually expressed as pounds per cubic foot or grams per cubic centimeter at standard pressure and temperature conditions for the system of measure.

Design Pressure - is the pressure used to determine the stress levels in components which will either contain a fluid or gas under pressure at a corresponding temperature. The Design Pressure is always greater than the maximum allowable working pressure. The maximum continuous operating pressure as designed by the manufacturer. See Maximum Allowable Working Pressure.

Design Speed - is the same as maximum allowable speed.

Dew Point - is the temperature at which the vapor will start to condense. Dew point of a gas mixture is the temperature at which the highest boiling point constituent will start to condense.

Diaphragm - A stationary element between stages of a multistage centrifugal compressor. It may include guide vanes for directing the flowing medium to the impeller of the succeeding stage in conjunction with an adjacent diaphragm, it forms the diffuser surrounding the impeller.

Diaphragm (Membrane) - is a thin metal disc isolating a gas from a hydraulic media in a diaphragm compressor while moving between two precision contours. The linear displacement of the diaphragm varies with each contour into which it is displaced, but in all cases is flexes between the gas plate and the hydraulic plate.

Diaphragm Compressor - Is a positive displacement reciprocating compressor using a flexible membrane or diaphragm in place of a piston.

Diaphragm Cooling - A method of removing heat from the flowing medium by circulation of a coolant in passages built into the diaphragm.

Differential Pressure - The difference in pressure between any two points of a system or component.

Diffuser - A stationary passage surrounding an impeller, in which velocity pressure imparted to the flow medium by the impeller is converted into static pressure.

Disc - The movable seating surface in a valve.

Discharge Piping - Is the piping between the compressor and the aftercooler, the aftercooler separator and the air receiver.

Discharge Pressure - is the total pressure (static plus velocity) at the discharge flange of the compressor and is the summation of the static head plus the velocity head. Discharge pressure may be expressed as a gauge pressure or an absolute pressure (gauge pressure + atmospheric pressure = absolute pressure).

Discharge Temperature - Is the temperature existing at the discharge port of the compressor.

Displacement - is the net volume displaced by the piston at the rated machine speed, generally expressed in cubic feet per minute or cubic meters per hour. For a single stage, single acting compressor, it is the displacement of the compressing end only. For a single stage, double acting compressor, it is twice the displacement of the compressing end less the volume of the piston rod. For multi-stage compressors, the displacement of the first stage is commonly stated as that of the entire compressor.

Displacement Compressor - A machine where a static pressure rise is obtained by allowing successive volumes of gas to be aspirated into and exhausted out of a closed space by means of the displacement of a moving member.

Displacement of a Compressor - The volume displaced by the compressing element of the first stage per unit of time.

Double Acting Compressor - A positive displacement type compressor.

Drag - Occurs when a valve does not close completely after popping and remains partly open until the pressure is further reduced.

Dry Gas - is any gas or gas mixture which contains no water vapor, and where all of the constituents are substantially above their respective saturated vapor pressure at the existing conditions.

Dry Unit (Oil Free) - Is one in which there is no liquid injection and/or liquid circulation for evaporative cooling or sealing.

Dynamic Losses - Friction against duct walls, internal friction in the air mass and direction variations will cause a speed reduction and are therefore called dynamic losses.

Dynamic Type Compressors - Machines in which air or gas is compressed by the mechanical action of rotating vanes or impellers imparting velocity and pressure to the flowing medium. (Raise the pressure of the air by converting the energy from the velocity of the air to pressure.)

Dynamic Viscosity - Is the force in newton required to move a fluid layer of one square meter area and a thickness of one meter with a velocity of one meter per second.

Dual Control - Load/unload control system that tries to maximize compressor efficiency by matching air delivery and air demand. Compressor is operated at full load or idle.

Duty Cycle - Percentage of time a compressor unit can upstate at full load over a thirty minute period.

Efficiency, Compression - Is the ratio of the theoretical work requirement to the actual work required to be performed on the gas for compression and delivery.

Efficiency, Isothermal - Is the ratio of the theoretical work calculated on an isothermal basis to the actual work transferred to the gas during compression.

Efficiency, Mechanical - Is the ratio of the thermodynamic work requirement in the cylinder to actual brake horsepower requirement.

Efficiency, Polytropic - Is the ratio of the polytropic compression energy transferred to the gas to the actual energy transferred to the gas.

Efficiency, Volumetric - Is the ratio of actual capacity to piston displacement, stated as a percentage.

Energy - of a substance is its capacity either latent or apparent to exert a force through a distance.

Enthalpy - Is the sum of the internal and external energies.

Entropy - Is a measure of the unavailability of energy in a substance.

External Energy - is that energy represented by the product of pressure and volume. It may be regarded as the energy a substance possesses by virtue of the space it occupies.

First Law of Thermodynamics - The amount of work done on or by a system is equal to the amount of energy transferred to or from the system.

Fixed Compression Ratio - Is the design (built-in) compression ratio for a rotary unit having this feature

Flash Point - Is the lowest temperature to which oil must be heated under standardized test conditions to drive off sufficient inflammable vapor to flash when brought into contact with a flame. Flash points of petroleum based lubricants increase with increasing pressure.

Free Air (FAD) - Free air delivery. Air at the atmospheric conditions of the site and unaffected by the compressor. Flow is measured at the discharge valve of the compressor, after the aftercooler, the water separator and built in check valve. Capacity and power consumption are corrected to ISO 1217 standard reference conditions: Ambient temperature = °20C, Ambient pressure = 1 bar(a), Relative humidity = 0%, Cooling water/air = 20°C, Effective working pressure at discharge valve = 7 bar(a).

Full Load - Achieved when the air compressor is running at full RPM with a fully opened inlet and discharge, delivering the maximum volume at the rated pressure.

Gas - A fluid (as hydrogen or air) that tends to expand indefinitely. Is one of three basic phases of matter.

Gas Compressor - A machine that compresses gases. Divided into two groups; process gas compressors and oil and gas field compressors.

Gas Laws - The behavior of perfect gases, or mixtures thereof, follows a set of laws. Boyle's law, Charle’s law, Amonton’s law, Dalton's law, Amagat's law, Avogadro’s law, Poisson's law.

Gas Plate - is the component in a diaphragm compressor that comes into contact with the process gas or air. The plate is machined with a contour that is a mirror image of the hydraulic plate contour. In addition to the contour, a series of radial grooves are machined from the edge of the contour to the center of the plate to allow for unrestricted passage of gas from the periphery of the contour to the discharge check valve port.

Gas Saturated With Another Vapor - actually a gas is never saturated with a vapor. However, the space directly occupied by the gas and vapor may be saturated. This occurs when the vapor is at its dew point, the saturation temperature corresponding to its partial pressure.

Head, Adiabatic - The energy in foot pounds required to compress adiabatically and to deliver one pound of a given gas from one pressure level to another.

Head Cavity - See Plate Contour.

Head, Pressure - A term used to describe the hot gas pressure on the outlet side of the refrigeration compression.

Heat - is the energy transferred because of a temperature difference. There is no transfer of mass.

Heat Exchanger - Is used to cool compressed air or gas. Designed to reduce the temperature and liquefy condensate vapors.

Horsepower (HP) - Is a unit of work equal to 33,000 foot pounds per minute, 550 foot pounds per second, or 746 Watts.

Horsepower, Brake (BHP) - The horsepower input to the compressor shaft, or more generally to any driven machine shaft.

Horsepower, Gas - The actual work required to compress and deliver a given gas quantity, including all thermodynamic, leakage and fluid friction losses. It does not include mechanical losses.

Horsepower, Ideal - The horsepower required to isothermally compress the air or gas delivered by the compressor at specified conditions.

Horsepower, Indicated - The horsepower calculated from compressor-indicator diagrams. Applied only to displacement type compressors.

Horsepower, Peak - The maximum power required by a given compressor when operating at a (1) constant discharge pressure with variable intake pressure, or (2) constant intake pressure with variable discharge pressure.

Hot Start - The compressor is started automatically, depending on demand. Control panel is energized with no “pre-start” cycle required, as pre-lubrication pump and buffer (seal) air are always “on”. A state of pre-start exists. Steam turbine compressors are “slow-rolling” to maintain “pre-start” turbine temperatures at an adequate, recommended level. “Heavy” instrumentation and monitoring accessories are recommended.

Hydraulic Plate - is the hydraulic distribution component in the diaphragm compressor. Its design allows for even distribution of hydraulic fluid against the diaphragm(s). The plate is machined with a contour that is a mirror image of the gas plate contour.

Ideal Gas - Is a gas that follows the perfect gas laws without deviation. There is no such thing, however it is the basis from which calculations are made and corrections applied.

Ideal Multi Stage Compression - The condition when a perfect gas is isentropically compressed, and the gas inlet temperature and also the amount of work spent is the same for each stage.

IGV - Inlet guide-vane valve. Valve assembly at the air inlet of a "blower" (single stage, low pressure, centrifugal air compressor). Usually advised to be mounted in very close proximity to the "blower" impeller. Provides "pre-swirl" of air flow in same rotational direction as "blower" impeller. Proven to improve efficiency (reduced bhp) during throttled-down modulation of "blowers". Effectiveness, when used with multi-stage centrifugal air compressors, degrades rapidly.

Impeller - The part of the rotating element of a dynamic compressor that imparts energy to the flowing medium by means of centrifugal force. It consists of a number of blades mounted so as to rotate with the shaft.

Indicated Power - Power as calculated from compressor-indicator diagrams.

Indicator Card - A pressure-volume diagram for a compressor or engine cylinder

Inducer - A curved inlet section on an impeller.

Inert Gas - is a gas which does not combine chemically with itself or any other element. The four gases of this type are helium, argon, neon, and krypton. In compressor terminology it usually means a gas which does not supply or support any of the needs of combustion, such as nitrogen.

Inertia Forces - When reciprocating compressors run, the moving parts such as pistons, rods, crossheads, connecting rods are repeatedly accelerated and retarded. These velocity changes set up pulsating inertia forces. The forces are of the first and second order. The first order forces have the same frequency as the compressor shaft speed and the second order forces have a frequency twice the shaft speed.

Inlet (Suction) Pressure - is the total gas pressure at the inlet connection flange of the compressor and is the summation of the static and velocity heads. For positive displacement compressors, the velocity pressure is usually too small to be considered at any point.

Inlet (Suction) Temperature - is the temperature of the gas entering at the inlet flange of the compressor.

Inlet Throttle - A compressor control mechanism designed to control performance output of the compressor to the demands or the plant process.

Intercooler - Heat exchangers for removing the heat of compression between stages of a compressor.

Intercooling - The removal of heat from the air or gas between stages.

Internal Energy - is that energy which a substance possesses because of the motion and configuration of its atoms, molecules and sub-atomic particles.

Isentropic Compression - An adiabatic compression with no increase in entropy; a reversible-adiabatic compression.

Isentropic Efficiency - The ratio of the real gas isentropic power consumption to shaft input.

Isentropic Power Consumption - The power which is theoretically required to compress a gas under constant entropy from a given inlet pressure to a given discharge pressure. (Calculated assuming ideal conditions.)

Isentropic Process (Adiabatic) - is one during which there is no heat added to or removed from the system.

Isothermal Compression - Is a compression in which the temperature of a gas remains constant.

Isothermal Efficiency - The ratio of the isothermal power consumption to shaft input.

Isothermal Power Consumption - The power which is theoretically required to compress a gas under constant temperature, in a compressor free from losses, from a given inlet pressure to a given discharge pressure.

Isothermal Process - is one during which there is no change in temperature.

Kelvin (K) - The Kelvin unit of thermodynamic temperature, is the fraction 1/273,16 of the thermodynamic temperature of the triple point of water. The triple point of water is the equilibrium temperature (0,01 °C or 273,16 K) between pure ice, air free water and water vapor.

Kilowatt (kW) - A unit of power equal to 1,000 watts.

Kilowatt Hour (kWh) - A unit of work, being the work done in one hour at the rate of 1,000 watts.

Kinetic Energy - is the energy a substance possesses by virtue of its motion or velocity. It is considered in driver calculations for the purpose of determining driver power.

kPa - Kilopascal; a metric measure of pressure based on force per unit area. (1 kPa = 4.01 inches of water).

Lift - The distance between the seat and disc seating surfaces when a valve is open.

Maximum Operating Pressure - The highest operating pressure the system or component is designed to withstand.

Limiter - is a device with a dual function in the diaphragm compressor hydraulic system. The primary function is to assure volumetric efficiency by remaining closed until the gas pressure reaches the system discharge pressure. The secondary function

is to limit the compressor pressure by opening at the set point, thereby reducing probability of over-pressurizing the compressor or system.

Lower Head - See Hydraulic Plate.

Maximum Allowable Speed - is the highest speed at which the compressor design will permit continuous operation and is expressed in revolutions per minute (rpm).

Maximum Allowable Working Pressure - is the maximum continuous operating pressure for which a compressor has been designed when handling the specified gas at the specified temperature. It is not the design pressure of the compressor or compressor auxiliaries.

Mayonnaise - The oily condensate discharged by lubricated air compressors. The name is derived from the appearance of the condensate. Under normal conditions oily condensate should just be cloudy, like a small amount of milk in a bucket of water. When a lubricated compressor goes wrong, then the condensate becomes thick and sticky. In fact almost identical in appearance to the name it has been given.

Mechanical Efficiency - is the ratio expressed as a percentage of the actual thermodynamic work done by a compressor to the actual shaft horsepower required by the compressor.

Modulating Control - Compressor controls will run the compressor at varying loads to accommodate demand variations. Running a compressor at less than full load results in a drop in compressor efficiency and thus an increase in operating costs.

Modulating Unload - The air compressor continues to run and air supply is matched to the demand by partial unloading. This can be accomplished by a regulator controlled floating inlet or by step unloading.

Moisture Separator - A unit designed to separate condensate from the compressed air stream.

Moisture Trap - A device designed to enable accumulated liquids to be held for draining in a compressed air system.

Multistage Axial Compressor - A machine having two or more impellers operating in series on a single shaft and in single casing.

Multistage Centrifugal Compressor - A machine having two or more impellers operating in series on a single shaft and in single casing.

Multistage Compressor - A machine employing two or more stages.

Non-Corrosive Gas - is one which does not attack normal materials of construction. However, the words non-corrosive and corrosive are relative terms.

Nonlubricated Compressor - A compressor designed to compress air or gas without contaminating the flow with lubricating oil. Piston rings and packing are usually

made of TFE-based materials or carbon or other synthetic material that operate without lubrication.

Oil Free Compressor - A positive displacement air compressor which has no oil injected into the compression chamber for lubrication, cooling or sealing.

Oil Injection Pump - See Compensating Pump.

Operating Pressure - The gauge pressure at which a pressure vessel is maintained in normal operation.

Partial Pressure - of a constituent in a mixture is the absolute pressure exerted by that portion of the mixture.

Perfect Intercooling - Is obtained when the gas is cooled to first stage inlet temperature following each stage of compression.

Piston Displacement - Net volume actually displaced by the compressor piston at rated machine speed, generally expressed in cubic feet per minute (usually CFM). For multistage compressors, the piston displacement of the first stage only is commonly stated as that of the entire machine.

Piston Speed - is the distance traveled by the piston in a unit of time, either feet per or meters per second.

Plate Contour - is the profile machined in a flat plate (Gas Plate or Hydraulic Plate). The contour is either a single radius type or a two radius type and the diaphragm(s) flex between the contour in the Gas Plate and the contour in the Hydraulic Plate.

Polytropic Process - is one in which the changes in gas characteristics and properties are allowed throughout the process.

Positive Displacement Compressors - Compressors in which successive volumes of air or gas are confined within a closed space, and compressed. They may be either reciprocating or rotating. (Trap air and then squeeze it to the desired pressure).

Potential Energy - is the energy a substance possesses because of its elevation above the earth or above some chosen datum plane.

Power Theoretical - The mechanical power required to compress polytropically and to deliver, through the specified range of pressures, the gas delivered by the compressor.

Precooler - Is a heat exchanger located immediately preceding a compressor to condense and remove a portion of the vapor in the mixture and thus reduce the total lb/hr to be handled.

Pressure - Force per unit area, usually expressed in pounds per square inch (PSI) or BAR or kPa.

Pressure Drop - Resistance to flow. Defined as the difference in pressure upstream and downstream.

Pressure Range - Difference between minimum and maximum pressures for an air compressor. Also called cut in-cut out or load-no load pressure range.

Pulsation Damper - A small receiver fitted on the inlet or discharge of a reciprocating compressor. The device is designed to remove the resonance from the compressor thereby reducing noise.

Rated Discharge Pressure - is the highest continuous operating pressure to which a compressor component is subjected to meet the condition specified by the user for the intended service. The rated discharge pressure is always less than the Design Pressure and is frequently equal to the Maximum Allowable Working Pressure even though the definitions are not equal.

Rated Horsepower - is the continuous input required to drive a compressor at the rated speed and the actual capacity under rated pressure and temperature conditions. For all compressors, it is the power required at the compressor shaft. It does not include losses in the driver or in the transmission equipment between the compressor and the driver.

Rated Speed - is the highest speed necessary to meet the specified service conditions. Rated speed and maximum allowable speed may be the same, but rated speed can never exceed the maximum allowable speed.

Ratio of Specific Heat - is the ratio of the C_p and C_v, and is expressed as k. It may vary considerably with temperature.

Reciprocating Compressors - Machines in which the compressing element is a piston having a reciprocating motion in a cylinder.

Reduced Pressure - is the ratio in absolute units of the actual gas pressure to the critical pressure of the gas.

Reduced Temperature - is the ratio in absolute units of the actual gas temperature to the critical temperature of the gas.

Rings - Circular metallic elements that ride in the grooves of a piston and provide compression sealing during combustion. Also used to spread oil for lubrication.

Ring Sticking – Freezing of a piston ring in its groove in a piston engine or reciprocating compressor due to heavy deposits in the piston ring zone.

Rotary Compressors - Machines in which compression is effected by the positive action of rotating elements.

Rotary Sliding Vane Compressors - Machines in which axial vanes slide radially in an eccentrically mounted rotor.

Safety Valve Setting - is the selling of a relief device that is equal to or less than the Maximum Allowable Working Pressure. The Safety Valve Setting is not to be confused with or is to be used interchangeably with the Limiter setting. The safety valve is installed in the process gas piping system.

Saturated Vapor Pressure - is the pressure existing at a given temperature in a closed volume containing a liquid and a vapor from that liquid after equilibrium conditions have been reached. It is dependent only on temperature and must be determined experimentally.

Saturation Temperature - is the temperature corresponding to a given saturated vapor pressure or a given vapor.

Second Law of Thermodynamics - Heat cannot, of itself, pass from a colder to a hotter body.

Shaft - The part of the rotating element on which the rotating parts are mounted and by means of which energy is transmitted from the prime mover.

Shaft Input - The power required at the compressor drive shaft. Losses in external transmissions such as gears and belt drives are not included.

Single Acting - The piston only compresses air with its stroke in one direction.

Single Stage Compressors - Machines in which air or gas is compressed in each cylinder or casing from initial intake pressure to final discharge pressure.

Single Stage Centrifugal Compressors - Machines having only one impeller.

Specific Gravity - is the ratio of the density of a given gas to the density of dry air, both measured at the same specific conditions of pressure and temperature. These conditions are usually 14.696 psiA and 60°F, or 1 barA and 0°C.

Specific Heat - The quantity of heat required to raise the temperature of a unit weight of a substance by one degree.

Specific Heat or Heat Capacity - is the rate of change in enthalpy with temperature. It may be measured at constant pressure or at constant volume. The values are different and are known as C_p and C_v, respectively.

Specific Volume - is the volume of a given weight of gas usually expressed as cubic feet per pound, or cubic meters per kilogram (cubic centimeters per gram).

STP - means the Standard Temperature and Pressure used for the system of measure. In the USA it is defined as 60°F and 14.696 psiA, while in the metric system it is defined as 0°C and 1 barA.

Suction Pressure - This is the pressure found on the suction side of a refrigeration system.

Surge - Is the reversal of flow within a dynamic compressor that takes place when the capacity being handled is reduced to a point where insufficient pressure is being generated to maintain flow. Also known as pumping.

Surge Limit - In a dynamic compressor, surge limit is the capacity below which the compressor operation becomes unstable.

Temperature - Is the property of a substance that gauges the potential or driving force for the flow of heat.

Temperature, Absolute - The temperature of a body referred to the absolute zero, at which point the volume of an ideal gas theoretically becomes zero. (Fahrenheit scale is minus 459.67°F / Celsius scale is minus 273.15°C).

Temperature, Discharge - Is the temperature existing at the discharge port of the compressor.

Temperature, Inlet - Is the temperature at the inlet flange of the compressor.

Temperature Rise Ratio - Is the ratio of the computed isentropic temperature rise to the measured total temperature rise during compression.

Theoretical Power - The power required to compress a gas isothermally through a specified range of pressures.

Tripping Speed - is that speed at which the over speed device is set to function. It is normally 110% of the rated speed.

Two Stage Compressor - Machines in which air or gas is compressed from initial pressure to an intermediate pressure in one or more cylinders or casings.

Two Step Control – Load/unload control system that tries to maximizes compressor efficiency by matching air delivery and air demand. Compressor is operated at full load or idle.

Unload - The air compressor continues to run, usually at full RPM, but no air is delivered because the inlet is either closed off or modified, not allowing inlet air to be trapped.

Unloaded Horsepower - The power that is consumed to overcome the frictional losses when operating in an unloaded condition.

Utilization Factor - The ratio in percentage of the time that the equipment is in operation to the total working time.

Vacuum - is a pressure below atmospheric pressure.

Valve Lift Area - is the minimum net flow are between the valve and the seat when the valve is fully open. Usually, this is also the least area in a valve through which gas must flow and is used to determine the peak gas velocity and pressure drop.

Volumetric Efficiency - is the ratio of volume of the gas admitted, at a specified temperature and pressure, to the volume of the full piston or diaphragm displacement.

Volute - A stationary, spirally shaped passage that converts velocity head to pressure.

Water Cooled Compressors - Machines cooled by water circulated through jackets surrounding the cylinders or casings.

Wet Gas - Is any gas or gas mixture in which one or more of the constituents is at its saturated vapor pressure. The constituent at saturation pressure may or may not be water vapor.

Work -is the energy transition and defined as force time distance. Work cannot be done unless there is motion.